ZEBRA®

ZQ500™ Series Printers

User Guide

© 2014, ZIH Corp.
P1064404-001 Rev. A
August, 2014

ZEBRA TECHNOLOGIES

Table of Contents

Proprietary Statements.....5
Document Conventions.....7
Introduction to the ZQ500™ Series Printer.....8
ZQ500 Series Technology.....9
Smart Battery.....9
Printing Technology.....10
Direct Thermal.....10
Thermal Shutdown.....11
QR Code.....11
Made for iPhone (MFi).....11
Near Field Communication (NFC).....11
ZQ500 Seires Overview.....12
Getting Ready to Print.....14
Installing the Battery.....14
Battery Safety.....15
Charger Safety.....15
Charging Status Indicators.....16
Battery Health Indicator.....16
SC2 Dimensions.....17
Model UCLI72-4 Quad Charger (AC18177-5).....17
AC Power Adapter (included in kit p/n P1031365-024 for all ZQ510 Printers).....19
Vehicle Cradle (P1063406-029) & 4-Bay Power Station (P1063406-027).....20
Loading Media Procedure.....22
Printer Status Icons.....24
Buttons.....25
Power Up Sequences.....25
Run Time Sequences without LED Flashes.....26
LED's.....26
Alerts.....26
Power Save Mode.....27
Sleep Mode.....27
Segmentation Mode.....28
Draft Mode.....28

Verify Printer is Working....28
Printing a Configuration Label....29
Connecting the Printer....29
Cable Communication....30
Wireless Communications with Bluetooth....31
Bluetooth Networking Overview....31
WLAN Overview....34
Setting Up the Software....35
Near Field Communication (NFC)....35
ZQ500 Series Accessories....37
Belt Clip....37
Hand Strap....37
Shoulder Strap....38
Soft Case....38
Exoskeleton....39
Mag Card Reader....40
Preventive Maintenance....41
Extending Battery Life....41
General Cleaning Instructions....41
Troubleshooting....44
Front Control Panel....44
Printer Status Indicators....44
Troubleshooting Topics....45
Troubleshooting Tests....47
Printing a Configuration Label....47
Communications Diagnostics....47
Specifications....52
Printing Specifications....52
Memory and Communications Specifications....52
Label Specifications....53
CPCL Font and Bar Code Specifications and Commands....54
ZPL Font and Bar Code Specifications and Commands....55
Communication Port....56
USB....56
Physical, Environmental and Electrical Specifications....56

ZQ500 Series Accessories.....59

Appendix A
USB Cables.....60

Appendix B
Alert Messages.....61

Appendix C
Media Supplies.....62

Appendix D
Maintenance Supplies.....62

Appendix E
Serial Number and PCC Number Locations.....63

Appendix F
Battery Disposal.....64
Product Disposal.....64

Appendix G
Using Zebra.com.....65

Appendix H.....67
Product Support.....67
Index.....68

Proprietary Statements

This manual contains proprietary information of Zebra Technologies Corporation. It is intended solely for the information and use of parties operating and maintaining the equipment described herein. Such proprietary information may not be used, reproduced, or disclosed to any other parties for any other purpose without the expressed written permission of Zebra Technologies Corporation.

Product Improvements

Since continuous product improvement is a policy of Zebra Technologies Corporation, all specifications and signs are subject to change without notice.

Agency Approvals and Regulatory Information

Design Safety certified by TUV	EN55022 Class B European Electromagnetic Radiation Standard
EN60950-1: 2nd Ed. Safety Standard	EN55024: European Immunity Standard
NOM (Mexico)	RCM (Australia/NZ)
FCC part 15 Class B	RoHS II
Canadian STD RSS-210	IP54 Rated

Liability Disclaimer

Inasmuch as every effort has been made to supply accurate information in this manual, Zebra Technologies Corporation is not liable for any erroneous information or omissions. Zebra Technologies Corporation reserves the right to correct any such errors and disclaims liability resulting therefrom.

No Liability for Consequential Damage

In no event shall Zebra Technologies Corporation or anyone else involved in the creation, production, or delivery of the accompanying product (including hardware and software) be liable for any damages whatsoever (including, without limitation, damages for loss of business profits, business interruption, loss of business information, or other pecuniary loss) arising out of the use of or the results of use of or inability to use such product, even if Zebra Technologies Corporation has been advised of the possibility of such damages. Because some states do not allow the exclusion of liability for consequential or incidental damages, the above limitation may not apply to you.

Copyrights

The copyrights in this manual and the label print engine described therein are owned by Zebra Technologies Corporation. Unauthorized reproduction of this manual or the software in the label print engine may result in imprisonment of up to one year and fines of up to $10,000 (17 U.S.C.506). Copyright violators may be subject to civil liability.

This product may contain ZPL®, ZPL II®, and ZebraLink™ programs; Element Energy Equalizer® Circuit; E3®; and AGFA fonts. Software © ZIH Corp. All rights reserved worldwide.

ZebraLink and all product names and numbers are trademarks, and Zebra, the Zebra logo, ZPL, ZPL II, Element Energy Equalizer Circuit, and E3 Circuit are registered trademarks of ZIH Corp. All rights reserved worldwide.

Monotype®, Intellifont® and UFST® are trademarks of Monotype Imaging, Inc. registered in the United States Patent and Trademark Office and may be registered in certain jurisdictions.

Andy™ , CG Palacio™, CG Century Schoolbook™, CG Triumvirate™, CG Times™, Monotype Kai™, Monotype Mincho™ and Monotype Sung™ are trademarks of Monotype Imaging, Inc. and may be registered in some jurisdictions.

HY Gothic Hangul™ is a trademark of Hanyang Systems, Inc.

Angsana™ is a trademark of Unity Progress Company (UPC) Limited.

Andale®, Arial®, Book Antiqua®, Corsiva®, Gill Sans®, Sorts® and Times New Roman® are trademarks of The Monotype Corporation registered in the United States Patent and Trademark Office and may be registered in certain jurisdictions.

Century Gothic™, Bookman Old Style™ and Century Schoolbook™ are trademarks of The Monotype Corporation and may be registered in certain jurisdictions.

HGPGothicB is a trademark of the Ricoh company, Ltd. and may be registered in some jurisdictions.

Univers™ is a trademark of Heidelberger Druckmaschinen AG, which may be registered in certain jurisdictions, exclusively licensed through Linotype Library GmbH, a wholly owned subsidiary of Heidelberger Druckmaschinen AG.
Futura® is a trademark of Bauer Types SA registered in the United States Patent and Trademark Office and may be registered in some jurisdictions.
TrueType® is a trademark of Apple Computer, Inc. registered in the United States Patent and Trademark Office and may be registered in certain jurisdictions.
All other product names are the property of their respective owners.

"Made for iPod", "Made for iPhone", and "Made for iPad" mean that an electronic accessory has been designed to connect specifically to iPod, iPhone, or iPad, respectively, and has been certified by the developer to meet Apple performance standards. Apple is not responsible for the operation of this device or its compliance with safety and regulatory standards. Please note that the use of this accessory with iPod, iPhone, or iPad may affect wireless performance.

Bluetooth® is a registered trademark of the Bluetooth SIG.

© 1996–2009, QNX Software Systems GmbH & Co. KG. All rights reserved. Published under license by QNX Software Systems Co.

All other brand names, product names, or trademarks belong to their respective holders.
©2014 ZIH Corp.

Works with:

Made for iPod iPhone iPad

Microsoft Windows

Certified by:

IP 54

MIL-STD 810

Wi Fi CERTIFIED

ORACLE Validated Integration Oracle E-Business Suite

SAP® Certified Powered by SAP NetWeaver®

Document Conventions

The following conventions are used throughout this document to convey certain information:

Cautions, Important, and Note

Caution • Warns you of the potential for electrostatic discharge.

Caution • Warns you of a potential electric shock situation.

Caution • Warns you of a situation where excessive heat could cause a burn

Caution • Advises you that failure to take or avoid a specific action could result in physical harm to you.

Caution • Advises you that failure to take or avoid a specific action could result in physical harm to the hardware.

Important • Advises you of information that is essential to complete a task.

Note • Indicates neutral or positive information that emphasizes or supplements important points of the main text.

Introduction to the ZQ500™ Series Printer

Thank you for choosing our Zebra® ZQ500™ Series Mobile Printer. You will find this rugged printer will become a productive and efficient addition to your workplace thanks to its innovative design and state of the art features. Zebra Technologies is the leader in industrial printers with world-class support for all of your bar code printers, software, and supplies.

This user's guide gives you the information you will need to operate the ZQ510 and ZQ520 printers. These printers use some of the latest technologies such as Near Field Communication (NFC) and Made for iPhone® (MFi). MFi printers provide Apple co-processor (MFi) support which allows an Apple device such as an iPhone or iPad® to authenticate and connect over Bluetooth®.

Made for iPod iPhone iPad

These printers use CPCL and ZPL programming languages. To create and print labels using the CPCL and ZPL languages, refer to the Programming Guide for CPCL and ZPL (p/n P1012728-008). See Appendix G for instructions on how to access manuals on zebra.com.

ZQ500 Series Software Utilities:

- Zebra Net Bridge™ : printer configuration, fleet management
- Zebra Setup Utility: single printer configuration, quick setup
- Zebra Designer Pro: label design
- Zebra Designer Drivers: Windows® driver
- OPOS Driver: Windows driver
- Multiplatform SDK

(These utilities can be found on the Zebra website at http://www.zebra.com/us/en/support-downloads.html. See Appendix G.)

Unpacking and Inspection

- Check all exterior surfaces for damage.
- Open the media cover (refer to “Loading the Media” in the Getting Ready to Print section) and inspect the media compartment for damage.

In case shipping is required, save the carton and all packing material.

Reporting Damage

If you discover shipping damage:

- Immediately notify and file a damage report with the shipping company. Zebra Technologies Corporation is not responsible for any damage incurred during shipment of the printer and will not cover the repair of this damage under its warranty policy.
- Keep the carton and all packing material for inspection.
- Notify your authorized Zebra re-seller.

ZQ500 Series Technology

The ZQ500 Series printers use several technologies made popular in other Zebra Mobile Printer product lines.

Smart Battery

The ZQ500 Series battery pack is a high capacity, smart Lithium Ion battery that contains electronics which allow the printer to monitor its operating parameters. Among these are the number of charge cycles it has undergone and its date of manufacture. Using these parameters, the printer’s software can monitor the battery’s condition and alert the user when to recharge or remove the battery from service.

Operating Temperature	Charging Temperature	Storage Temperature
-20°C to +55°C (-4°F to 131°F)	0°C to +40°C (32°F to 104°F)	-25°C to +65°C (-13°F to 149°F)

The ZQ510 and ZQ520 printers will only function properly with genuine Zebra smart battery packs.

The smart battery's health has three states: GOOD, REPLACE, and POOR. The battery health factor determines whether or not the printer can operate and what is communicated to the user via the display.

# of Charge Cycles	Health	Power-up Message
<300	GOOD	None
≥300 but <550	REPLACE	"Battery Diminished Consider Replacing" *
≥550 but <600	REPLACE	"Warning-Battery is Past its Useful Life" **
≥600	POOR	"Replace Battery Shutting Down" ***

*** Warning accompanied by three beeps in rapid succession.**

**** Warning accompanied by a series of three double beeps in rapid succession.**

***** Warning will flash on and off and be accompanied by beeping at a rate of once per second. After 30 seconds the printer will shut down.**

Printing Technology

The ZQ500 Series printers use the Direct Thermal method to print human readable text, graphics and barcodes. It incorporates a sophisticated print engine for optimal printing under all operational conditions.

Direct Thermal

Direct thermal printing uses heat to cause a chemical reaction on specially treated media. This reaction creates a dark mark wherever a heated element on the printhead comes in contact with the media. Since the printing elements are arranged very densely at 203 d.p.i. (dots per inch) horizontal and 200 d.p.i. vertical, highly legible characters and graphic elements may be created a row at a time as the media is advanced past the printhead. This technology has the advantage of simplicity, as there is no requirement for consumable supplies such as ink or toner. However, since the media is sensitive to heat, it will gradually loose legibility over long periods of time, especially if exposed to environments with relatively high temperatures.

Thermal Shutdown

The ZQ500 Series printers have a thermal shutdown feature whereby the printer hardware will detect a printhead over-temperature condition at 65°C. The printer will automatically stop printing until the printhead cools down to 60°C. Printing will then recommence without a loss of label data or without any degradation of print quality.

QR Code

The QR barcode includes human readable text (URL) which links the user to printer information and short videos on topics such as buying supplies, features overview, loading media, printing a configuration report, cleaning instructions, and accessory information. (See Page 13 for each printer's URL address.)

Made for iPhone (MFi)

ZQ500 Series printers support communication with Apple devices running iOS 5 or later over a standalone Bluetooth 4.0 radio and the BT3.0 radio included with the 802.11n (dual) radio.

Made for iPod iPhone iPad

Near Field Communication (NFC)

A ***passive*** NFC tag with the Bluetooth printer address will provide instant access to printer-specific information via an NFC-enabled smartphone. The ZQ500 Series printers are also ***active*** NFC devices that can not only collect information but exchange that information with other compatible devices.

ZQ500 Series Overview (ZQ510 Shown)

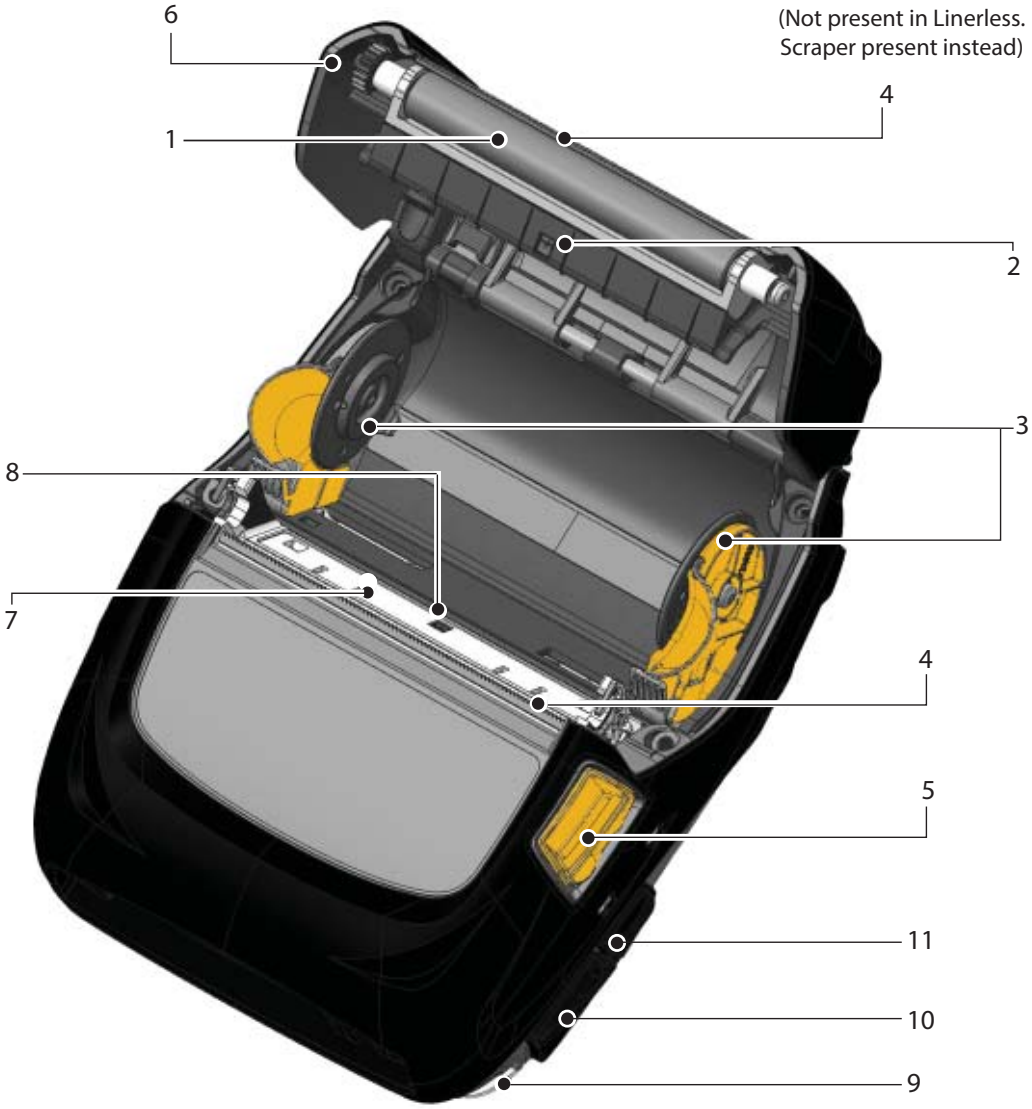

1. Platen Roller
2. Black Bar Sensor
3. Media Support Disks
4. Tear Bar
5. Media Cover Button
6. Media Cover
7. Printhead
8. Gap Sensor
9. Strap Post
10. USB Port
11. DC Input
12. Power Button
13. Control Panel
14. Belt Clip Opening
15. Select Button
16. Paper Feed Button

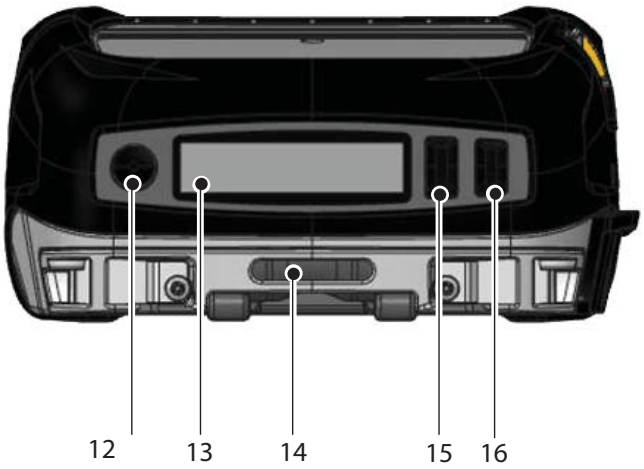

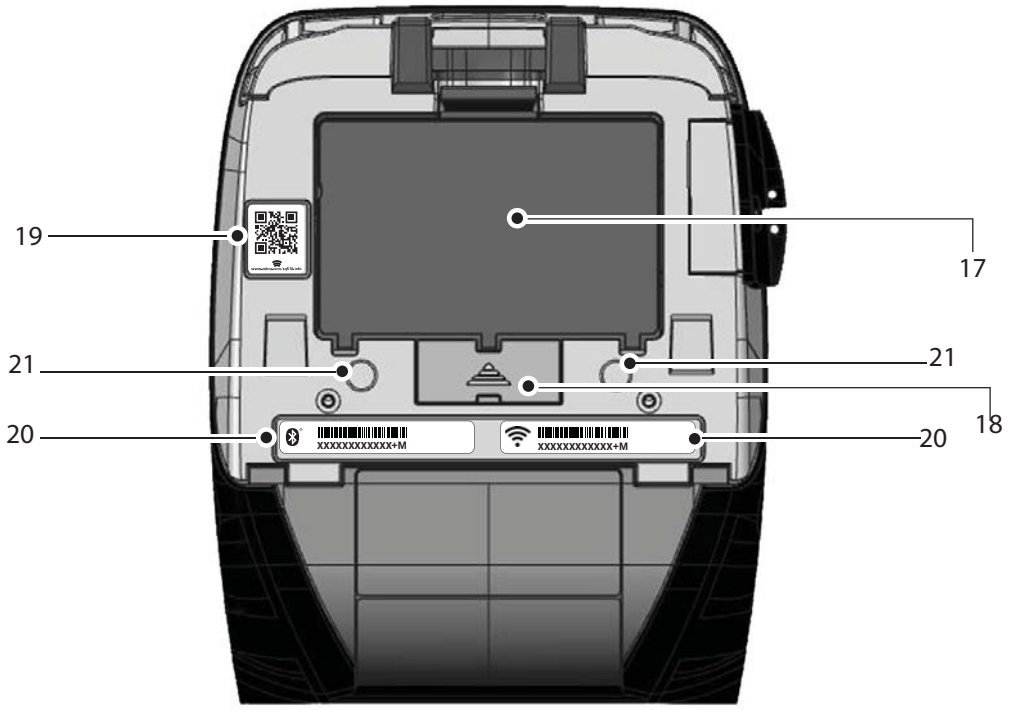

17. Battery	20. MAC Address/Bluetooth ID Labels
18. Docking Contacts/Cover	21. Mounting Points
19. QR Code	22. ***Zebra Print Touch™*** Icon NFC)

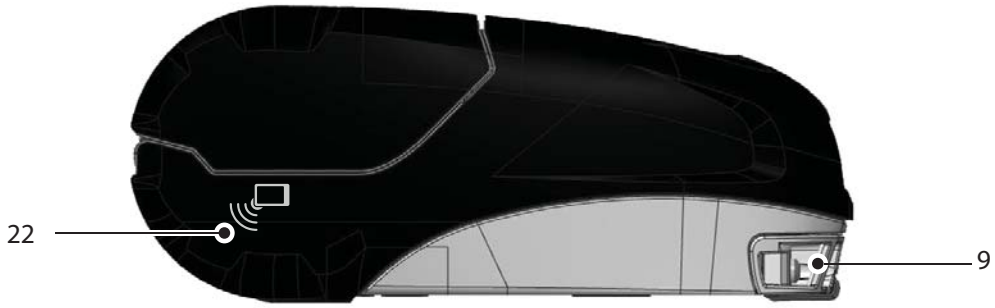

Note: Scanning the QR code with a smartphone will provide printer-specific information at www.zebra.com/zq510-info and www.zebra.com/zq520-info.

Note: Tapping the Zebra Print Touch™ icon with a Near Field Communication (NFC) enabled smartphone will provide instant access to printer-specific information. For more information about NFC and Zebra products, go to http://www.zebra.com/nfc. Bluetooth pairing applications via NFC is also possible. Please see Zebra Multi-platform SDK for more information.

Battery

Installing the Battery

Important • Batteries are shipped in sleep mode to preserve their maximum capacity while in storage prior to initial use. Plug the battery into the Smart Charger 2 or Quad Charger (see Pg. 17) to wake it up before using for the first time.

1. Locate the battery compartment on the bottom of the printer.
2. Insert the battery into the printer as shown in Figure 1. (It is not possible to insert the pack in an incorrect orientation.)
3. Rock the battery into the compartment as shown until it locks in place.

When the battery is first installed, the control panel indicators may briefly turn on and then go off which indicates the battery is not fully charged.

Figure 1: Installing the Battery (ZQ510 Shown)

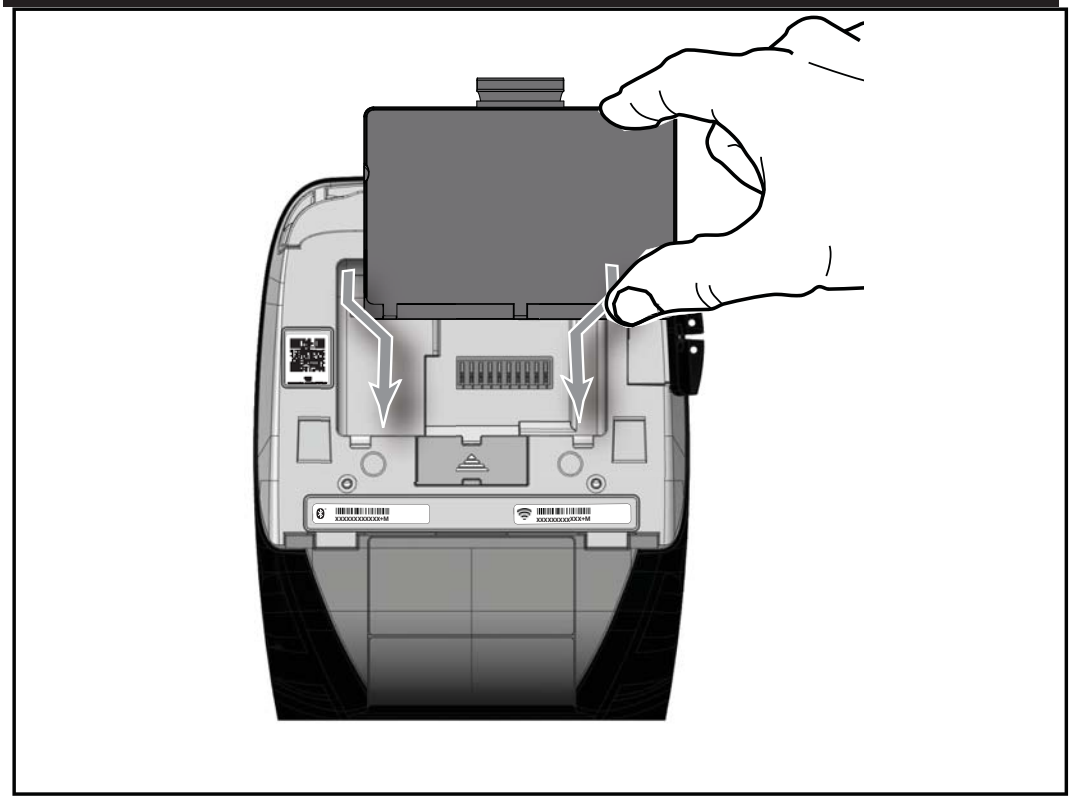

Battery Safety

Caution • Avoid accidental short circuiting of any battery. Allowing battery terminals to contact conductive material will create a short circuit which could cause burns and other injuries or could start a fire.

Important • Always refer to the Important Safety Information data sheet shipped with each printer and the Technical Bulletin shipped with each battery pack. These documents detail procedures to ensure maximum reliability and safety while using this printer.

Important • Always dispose of used batteries properly. Refer to Appendix E for more battery recycling information.

Caution • Use of any charger not approved specifically by Zebra for use with its batteries could cause damage to the battery pack or the printer and will void the warranty.

Caution • Do not incinerate, disassemble, short circuit, or expose to temperatures higher than 65°C (149°F).

Charger Safety

Do not place any charger in locations where liquids or metallic objects may be dropped into the charging bays.

Smart Charger-2 (SC2) Single Battery Charger (P1027407)

The Smart Charger-2 (SC2) is a charging system for use with the 2-cell lithium-ion smart battery used in the ZQ510 printers.

Charging Status Indicators

The SC2 uses a LED indicator to indicate the charge state in either Green, Yellow, or Amber as detailed below.

DC Power Input	Indicator	Battery Status
Present	Green	Battery not present
Present	Green	Fully charged
Present	Yellow	Charging
Present	Amber	Fault
Present	Off	Present and Battery Health = POOR

There will also be a battery charging graphic to indicate that this LED is the charging status indicator .

Battery Health Indicator

The SC2 features a tri-color (Yellow/Green/Amber) LED to indicate the health of the battery pack. An evaluation of the battery health begins upon insertion of the battery in the charger and results in the appropriate LED being illuminated as shown below. The LED will remain illuminated as long as input power is applied.

Battery	Indicator	Health Status
None or non-smart	Off	
Smart battery present	Green	GOOD
Smart battery present	Yellow	CAPACITY DIMINISHED
Smart battery present	Flashing yellow	PAST USEFUL LIFE
Smart battery present	Amber	UNUSABLE-REPLACE (discard per Instructions in Appendix E

Note • For detailed information on the SC2, refer to the Smart Charger 2 User Guide (p/n P1040985-001).

Figure 2: Smart Charger-2 (SC2)

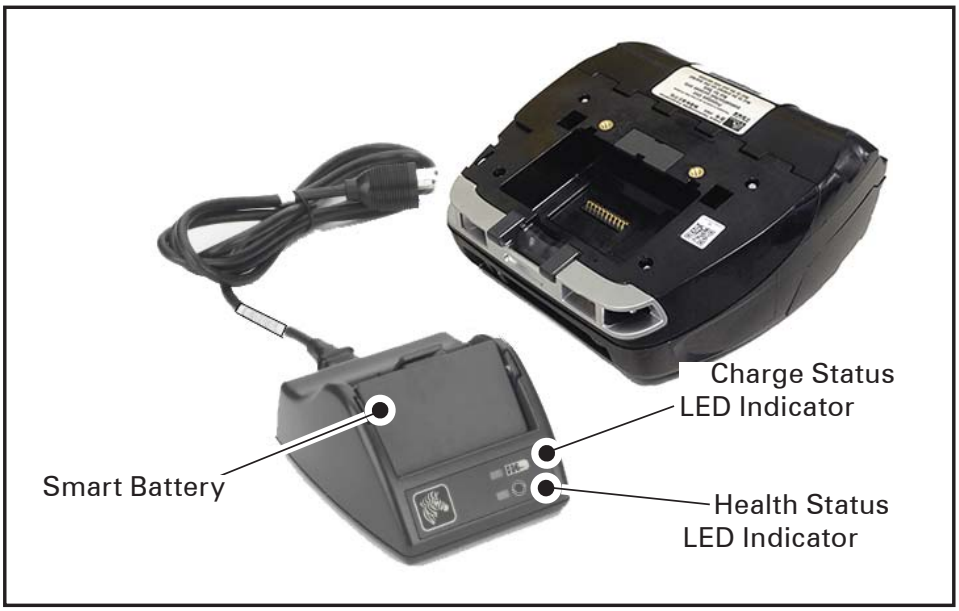

Charge Status Icon

Health Status Icon

SC2 Dimensions

Height	Width	Length
65.1 mm (2.56 in.)	101.5 mm (4 in.)	120.9 mm (4.75 in.)

Model UCLI72-4 Quad Charger (AC18177-5)

The UCLI72-4 Quad Charger is designed to charge up to four (4) ZQ500 Series battery packs simultaneously. Batteries must be removed from the printer to be charged in the Quad Charger.

1. Ensure that the charger has been installed properly per the Quad Charger instruction manual. Ensure that the power indicator on the front panel is on.
2. Plug a battery pack into any one of the four charging bays as shown in Figure 5, noting the orientation of the battery pack. Slide the battery pack into the charging bay until it stops and then rock the battery pack back until it snaps into place. The amber indicator directly under the battery being charged will turn on if the battery is properly inserted.

The indicators under the battery will allow you to monitor the charging process per the table below:

Amber	Green	Battery Status
On	Off	Charging
On	Flashing	80% charged (O.K. to use)
Off	On	Completely Charged
Flashing	Off	Fault-Replace Battery

Important • A fault condition is caused by a problem with the battery. The charger may indicate a fault because the battery is too hot or cold to charge reliably. Try to charge the battery again when it returns to the room's ambient temperature. If the amber indicator starts flashing on the second attempt, the battery should be discarded. Always dispose of batteries in a proper manner as described in Appendix F.

Figure 3: Quad Charger

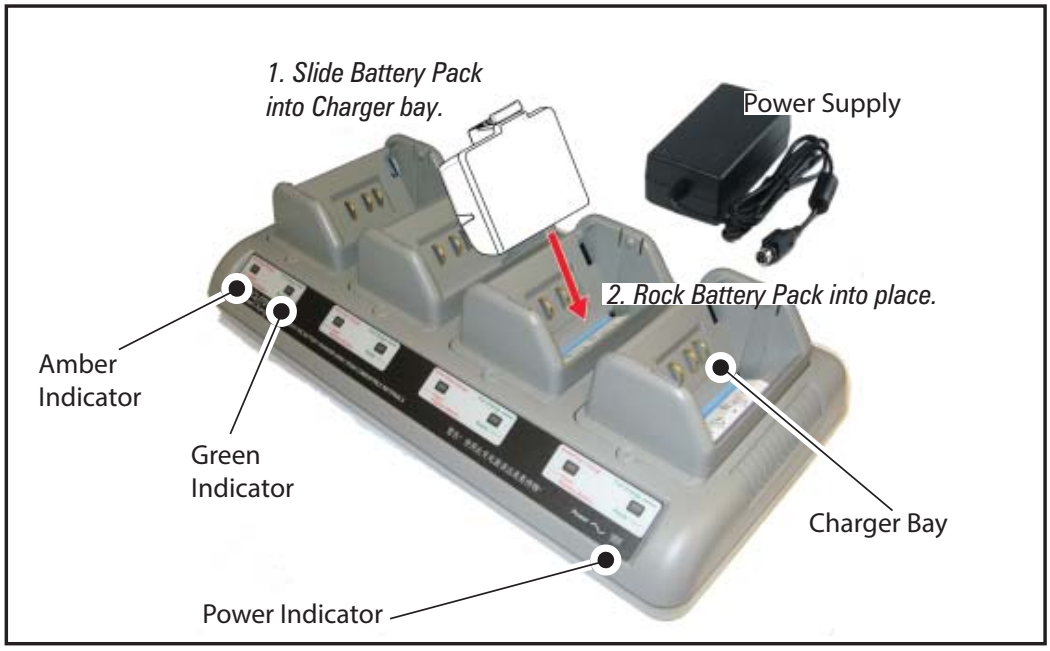

Quad Charger Cycle Times :

Battery Status	ZQ510
Battery 80% Charged	1.5 Hrs.
Battery Fully Charged	< 5 Hrs.

Note • These times are for completely discharged batteries.

Battery packs which are only partially discharged will take less time to reach their charged state. Batteries which have reached 80% of their charge capacity may be used, however, it is recommended that you allow the batteries to reach a full charge to maintain maximum battery life.

The UCLI72-4 Quad Charger has a safety feature which stops charging a battery after six hours regardless of its charge state. If not fully charged, it might be indicative of a battery that needs to be replaced.

Use care when installing the UCLI72-4 Quad Charger so that you do not block the ventilating slots on the top and bottom covers. Ensure that the charger is plugged into a power source which will not accidently be turned off if you will be charging batteries overnight.

AC Power Adapter (included in kit p/n P1031365-024 for all ZQ510 Printers)

Figure 4: Charging the Battery Pack with the AC Power Adapter)

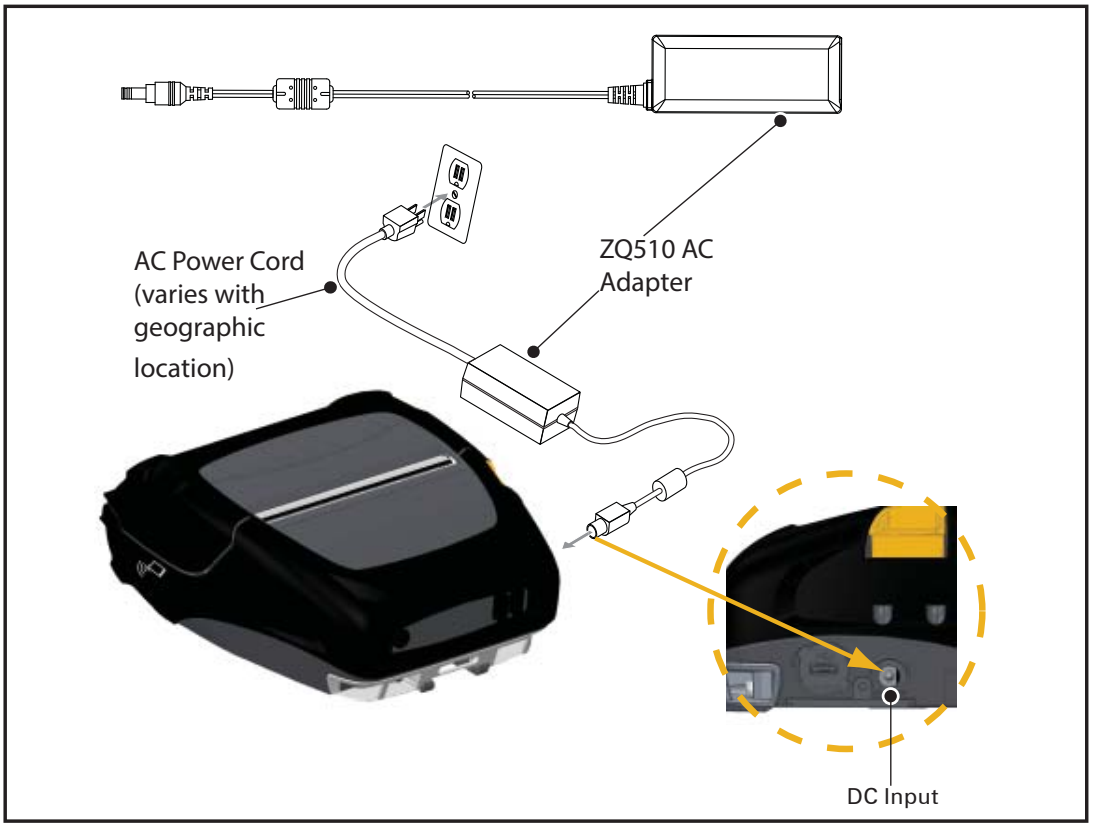

- Open the protective cover on the ZQ510 printer to expose the DC input charger jack.
- Connect the appropriate AC power cord for your location to the adapter and then plug the power cord into an AC receptacle.
- Plug the barrel plug from the P1029871 AC adapter into the charger jack on the printer.
- The printer will power up and begin charging. The printer can be left on or turned off at this point. Charging will continue in either state.

Note • Batteries are shipped in sleep mode to preserve their maximum capacity while in storage prior to initial use. Plug the battery into the Smart Charger 2 or Quad Charger (see Pg. 17) to wake it up before using for the first time.

While it's possible to charge the battery when using the printer, charge times will increase under this condition.

Vehicle Cradle (P1063406-029)

The ZQ500 Series Vehicle Cradle provides a means to mount a ZQ510 and ZQ520 printer in a vehicle while at the same time providing charging power to the battery. The Vehicle Cradle features USB connectivity to allow the user to connect a laptop or tablet to the cradle.

Battery Eliminator (P1063406-032)/Battery Eliminator Vehicle Cradle (P1063406-028)

The ZQ500 Series Battery Eliminator allows a vehicle based mobile printer user to operate the printer without the use of a battery. The Battery Elimnator Vehicle Cradle enables the user to mount a ZQ500 Series printer in a vehicle without the use of a battery.

4-Bay Power Station (P1063406-027)

The ZQ500 4-Bay Power Station allows a total of four (4) ZQ510 or ZQ520 printers to be docked and charged. The Power Station provides battery charging power while still maintaining all of the printer's functionality.

Note • For detailed information on accessories, refer to the ZQ500VC User Guide (P1071204-001), the ZQ500 4-Bay Power Station User Guide (P1071266-001), the Battery Eliminator User Guide (P1071365-001), and the Battery Eliminator Cradle User Guide (P1073631-001).

Before docking the printer on either the Vehicle Cradle or the 4-Bay Power Station, you must remove the docking contacts cover located on the bottom of the printer. To remove the cover, firmst remove the battery, and then use a small screwdriver or coin to detach the cover and expose the docking contacts.

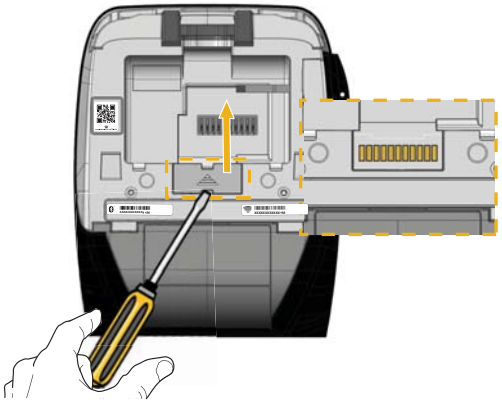

Figure 5: Docking and Un-Docking the Vehicle Cradle

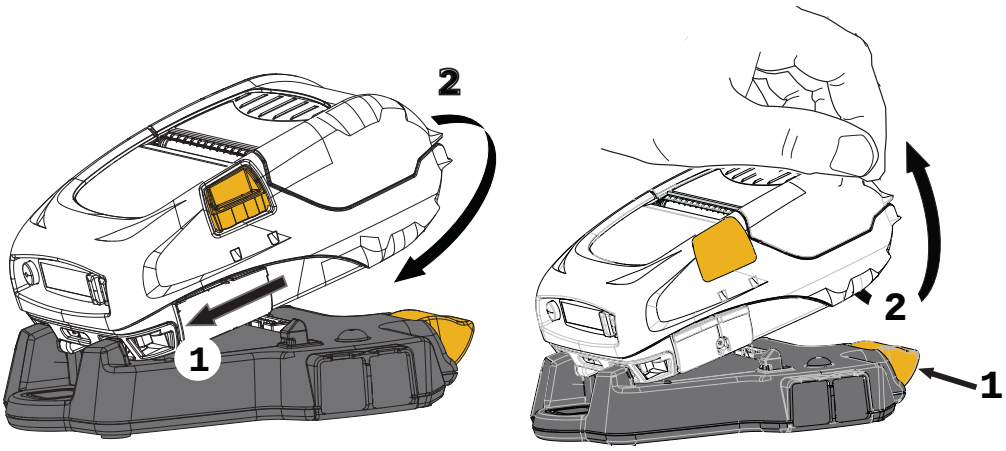

Figure 6: Docking and Un-Docking the 4-Bay Power Station

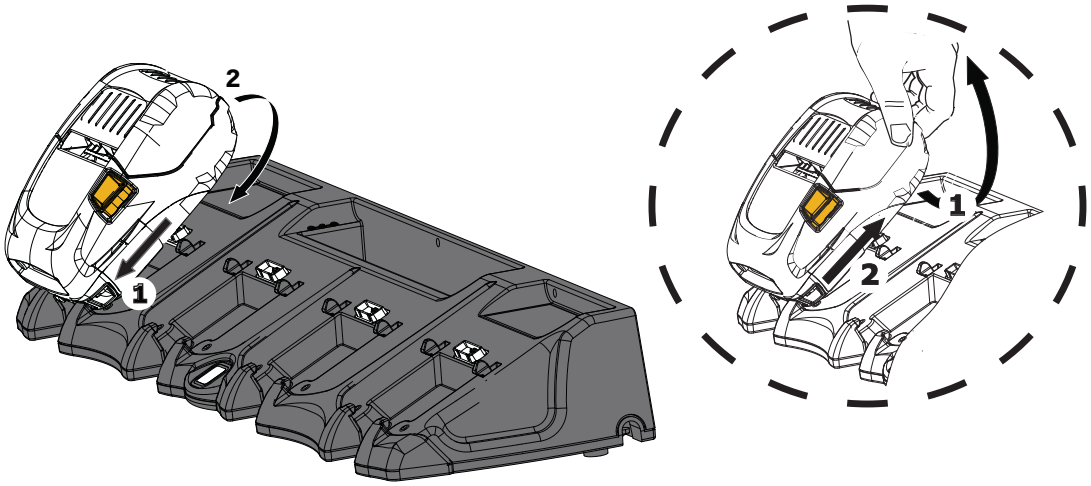

Loading the Media in the ZQ500 Series Printers

The ZQ500 Series printers are designed to print either continuous (receipt) media or label stock.

Loading Media Procedure

1. Open the printer (Refer to Figure 7).

- Press the Media Cover Button on the side of the printer as shown in “1” below. The Media Cover will open automatically.
- Rotate the Media Cover back completely as shown in “2”, exposing the media compartment and adjustable media supports.

Figure 7: Opening the Printer

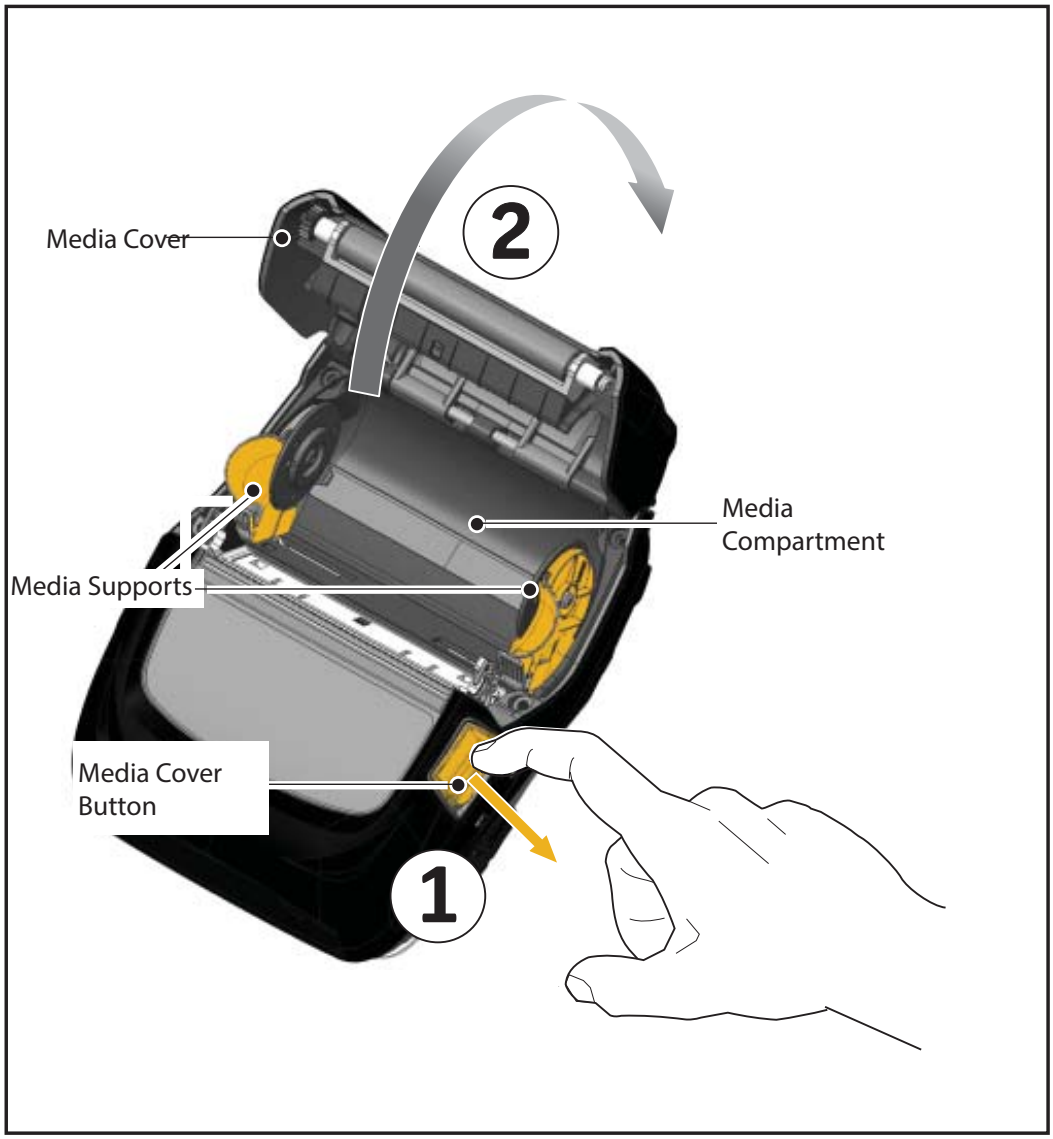

2. Pull the media supports apart as shown in Figure 8 below. Insert the roll of media (in the orientation shown) between the supports and let the supports secure the media in place. The supports will adjust themselves to the width of the media, and the media roll should be able to spin freely on the supports.

Figure 8: Loading Media

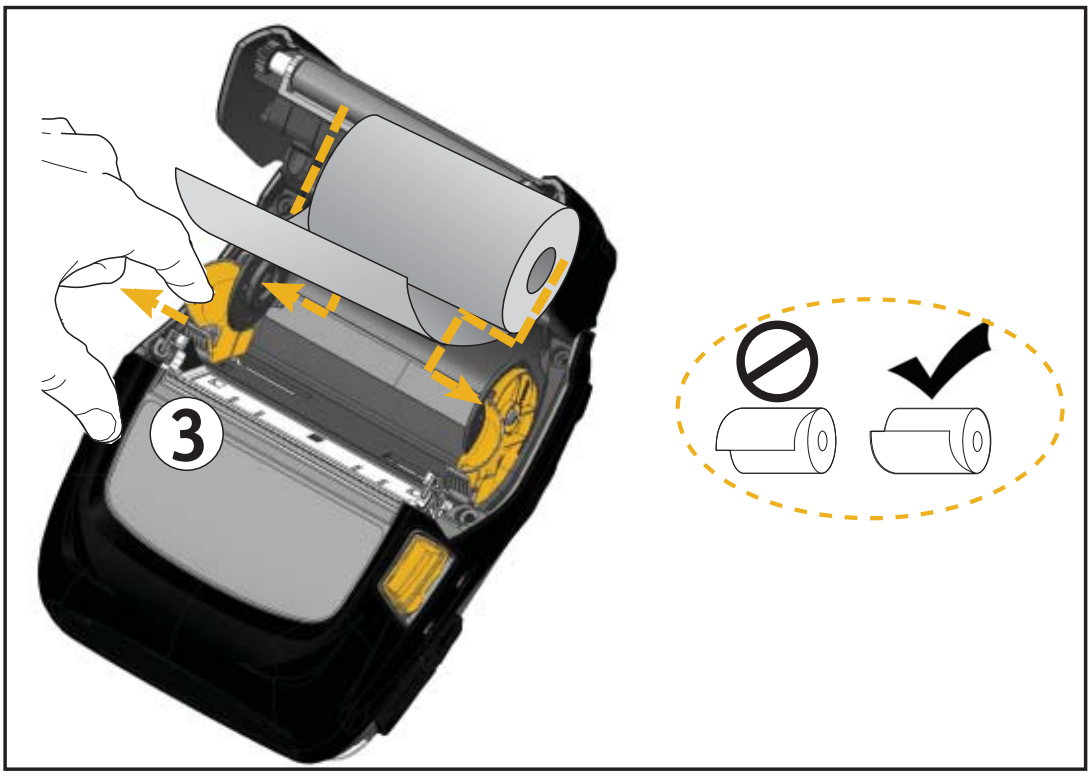

3. Close the Media Cover until it clicks into place and the media will advance as shown .

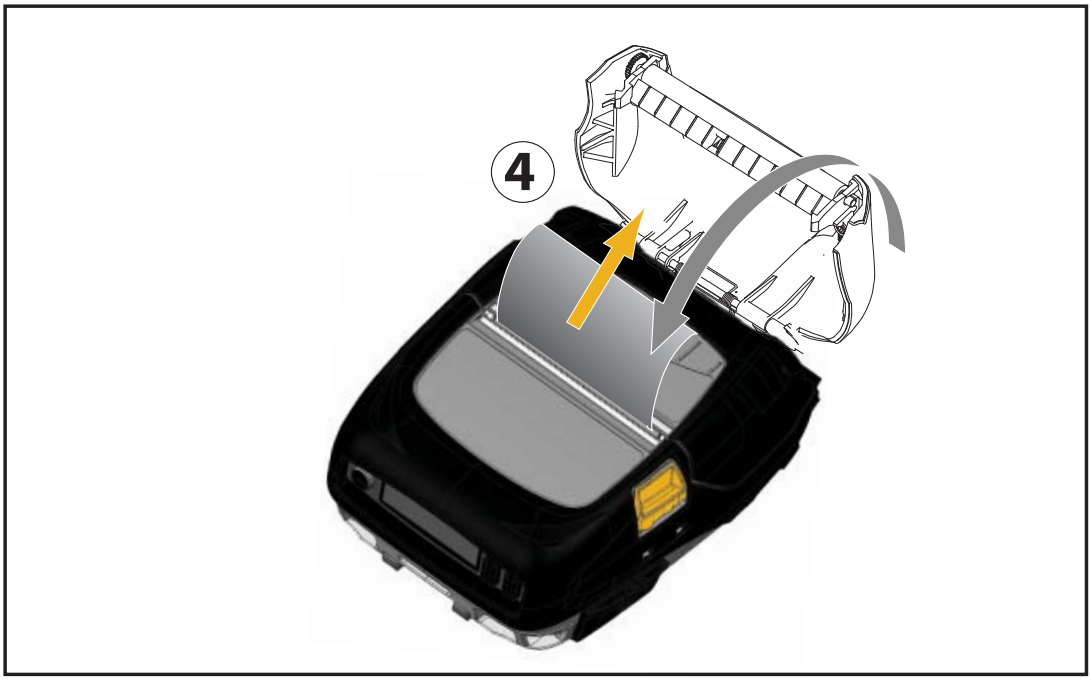

Operator Controls

The ZQ510 and ZQ520 feature a control panel with buttons for the Power On/Off and Media Feed functions, as well as a display for providing information regarding printer functions (Fig. 9). The menu displays a single row of icons used to indicate printer status. The LCD also displays acknowledged alerts and non-acknowleged alerts. Acknowledged alerts have a single response option which requires the user to press the “Select” button.

Figure 9: Control Panel

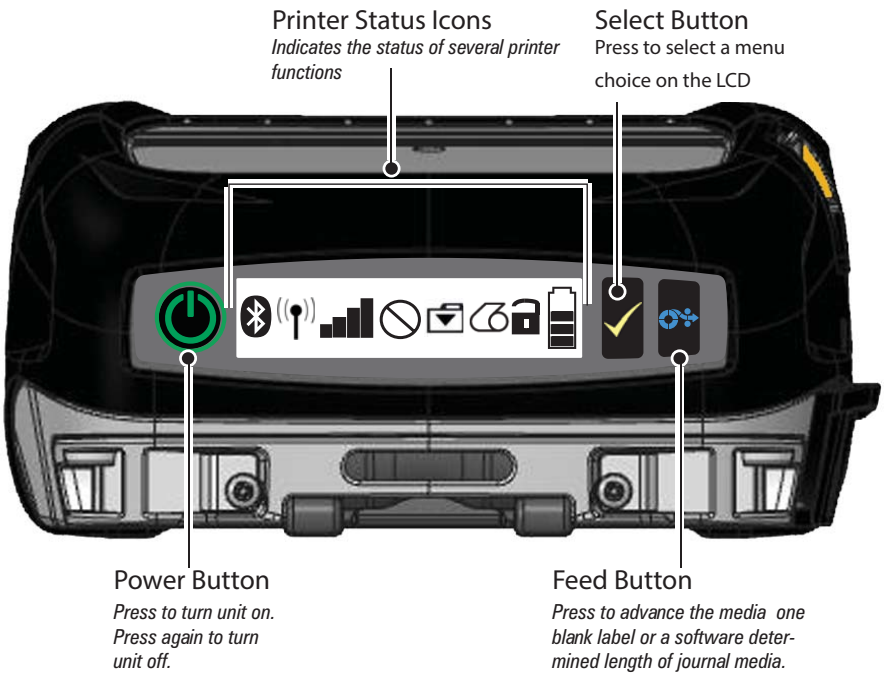

Printer Status Icons

	Bluetooth		Media
	WiFi Connection		Cover Open
	WiFi Signal Strength		Battery
	Error	DC	Battery Eliminator
	Data		Power Save Mode
	Draft Mode		

Icons for Power Save Mode and Draft Mode are also displayed on the control panel in place of the Media Out Icon. When the printer is in Power Save Mode and is not in a media out condition, the Power Save icon shall display. When the printer is in Power Save Mode and also in a media out condition, the Media Out icon will be displayed instead of the Power Save icon. This is due to the fact that the printer is not running when there is a media out condition. If the printer is in both Power Save Mode and Draft Mode, the Power Save icon will be displayed.

When the printer is in Draft Mode due to a user setting, the Draft Mode icon will be displayed. However, when the printer is in Draft Mode and in a media out condition, the blinking Media Out icon will be displayed.

Buttons

The User has the ability to use the three button interface on the ZQ510 and ZQ520 with the following Power Up and Run Time sequences.

Power Up Sequences

Sequence #	Function	Keys	Button
1	Two Key Report	Hold down Feed button while pressing the Power button	
2	Config Label then Network Label	Hold down Select button while pressing the Power button	
3	Forced Download	Hold down the Select and Feed buttons while pressing the Power button	
4	Causes the unit to turn on or off or to enter Sleep Mode	Power Button	

Run Time Sequences without LED Flashes

Sequence #	Function	Keys	Button
1	Two-key and ZPL Config	Hold down Feed button and Select button for 3 seconds	
2	Repeated Feed Events	Feed button	
3	Wake (if in Sleep Mode)	Power button or Select button	

LED's

The ZQ500 Series printers feature a tri-colored LED ring located around the Power button which shows the state of the battery during charging processes (as shown below).

	Power On/Charged Battery Power On/Battery Eliminator Plugged In
	Battery Charging (Yellow LED Ring)
	Sleep Mode (Blinking Green LED Ring)
	Battery Fault (Red LED Ring)

Alerts

The control panel has the ability to display various alerts to the user in the form of Acknowledged Alerts, Non-Acknowledged Alerts, and Error Alerts.

An Acknowledged Alert displays over the printer status icons and requires user input to be cleared, i.e. press the Select button to clear such an alert.

A Non-Acknowledged Alert also displays over the printer status icons, but in this case it does not require user input to be cleared. The alert will automatically be cleared after being displayed for five (5) seconds.

Error Alerts also appear over the printer status icons and require no user input via the front panel to be cleared, but they do require the user clearing the error condition by other means. The Error Alert will remain on the display until the error condition is cleared.

Power Saving Features

The ZQ500 Series printers have a few key features designed to extend the life of the battery. These features are described below.

Sleep Mode

The Sleep Mode feature is a way the printer conserves battery life whereby the printer will automatically go into a “sleep” state after two (2) minutes of inactivity. When the printer is in this state there will be no content displayed on the LCD in addition to no backlight. The printer will indicate Sleep Mode by a slow blinking green LED ring around the Power Button (See Page 26).

If the Power Button is pressed for less than three (3) seconds (<3), then the printer will enter Sleep Mode.

If the Power Button is pressed for more than three (3) seconds (>3), then the printer will execute a soft power down.

In order to “wake up” the printer, the user must press the Power or Select buttons for less than three (3) seconds, or the printer will wake up on its own when communication is initiated via Bluetooth. If the Power Button is pressed for more than three (3) seconds, the printer will wake up and shut down completely.

To enable or disable Sleep Mode, send the `power.sleep.enable` command to the printer using Zebra Setup Utilities (ZSU) and set it to either “on” or “off”. (The default setting is “on”.) To set the time after which the printer will enter Sleep Mode, send the `power.sleep.timeout` (in seconds) to the printer using the ZSU.

Power Save Mode

Power Save Mode refers to a state the printer will enter when the battery is under duress. Under normal operation with a healthy fully charged battery, the printer will load the entire printhead while printing a line of data.

As the battery’s health declines (due to low voltage or cold temperature) the printer will change its printing strategy in a way that breaks up the print line into smaller segments that it can print safely without shutting down the battery. In this mode the user may experience slower printing.

The Power Save icon will be displayed on the LCD as this is occurring and the printer may have an audible sound change due to the altered motor step rate while in this mode.

Draft Mode

The user can configure the printer to print in Draft Mode via SGD command `media.draft _ mode` (default is “off”), which optimizes the printer for text-only printing. While in Draft Mode, print speed increases from 4 inches per second (ips) to 5 ips with approximately a 22% reduction in optical density. When a printer is in this user setting, a Draft Mode icon will be displayed. If the printer is in both Power Save mode and Draft Mode, the Power Save icon will display. If the printer is in Draft Mode during a media out condition, the blinking Media Out icon will be displayed.

Note • For an explanation and a list of all SGD commands, please refer to the Programming Guide (p/n P1012728-xxx) at:
http://www.zebra.com/us/en/support-downloads.html

Note • For detailed information on sending SGD commands to the printer using Zebra Setup Utilities, please refer to the Wireless Configuration for 802.11n and Bluetooth Radios for Link-OS Mobile Printers (p/n P1048352-001) at: http://www.zebra.com/us/en/support-downloads.html

Verify Printer is Working

Before you connect the ZQ500 Series printer to your computer, make sure that the printer is in proper working order. You can do this by printing a configuration label using the “two key” method. If you can’t get this label to print, refer to the “Troubleshooting” section of this manual.

Printing a Configuration Label

1. Turn the printer off. Load the media compartment with journal media (media with no black bars printed on the back).
2. Press and hold the Feed Button.
3. Press and release the Power button and keep the Feed button pressed. When printing starts, release the Feed button.

The unit will print a line of interlocking “x” characters to ensure all elements of the print head are working, print out the version of software loaded in the printer, and then print the report.

The report indicates model, serial number, baud rate, and more detailed information on the printer’s configuration and parameter settings. (Refer to the Troubleshooting section for sample print-outs and a further explanation on how to use the configuration label as a diagnostic tool.)

Connecting the Printer

The printer must establish communications with a host terminal which sends the data to be printed. Communications occur in four (4) basic ways:

- ZQ500 Series printers can communicate by cable via either a standard USB 2.0 or micro USB protocols. USB drivers are included in the Zebra Designer Driver which can be downloaded from www.zebra.com/drivers.
- By means of a wireless LAN (Local Area Network) per 802.11 specifications. (Optional)
- By means of a Bluetooth short range radio frequency link.
- WinMobile®, Blackberry®, and Android® devices use standard Bluetooth protocol.
- ZQ500 Series printers are compatible with iOS devices, therefore printing via Bluetooth to an Apple® device is possible.

Made for iPod iPhone iPad

Microsoft Windows

Caution • The printer should be turned off before connecting or disconnecting a communication cable.

The standard cable connection for the ZQ500 Series printers is USB. The USB port provides 500mA to the A/B port when in host mode and can connect a printer to a PC via a Type A plug to Micro B plug. The cable has a plastic twist lock cap that provides strain relief and locks the cable into the printer housing (see below). Refer to Appendix A for part numbers.

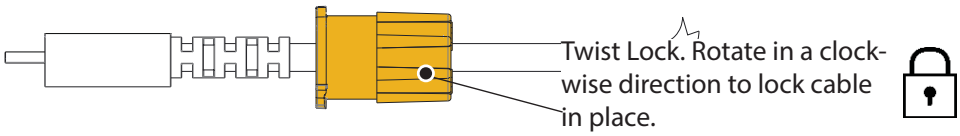

Figure 10: Cable Communication with PC

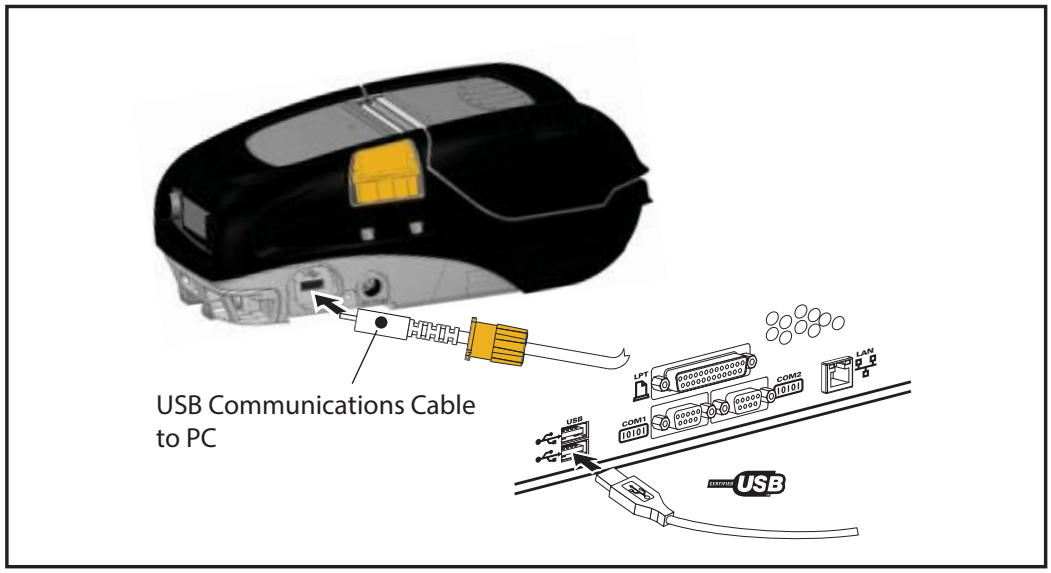

The small 5-pin connector on the USB cable plugs into the printer, and the connectors are keyed to ensure correct alignment. Do not try to force the cable if it does not plug in as this could damage the pins.

The other end of the cable plugs into the USB port on a computer as shown in Figure 10. The ZQ500 Series printers are configured with the USB Open HCI interface allowing them to communicate with Windows® based devices.

USB drivers are included in the Zebra Designer Driver which can be downloaded from the Zebra website.

Wireless Communications with Bluetooth

Bluetooth is a worldwide standard for the exchange of data between two devices via radio frequencies. This form of point- to-point communication does not require access points or other infrastructure. Bluetooth radios are relatively low powered to help prevent interference with other devices running at similar radio frequencies. This limits the range of a Bluetooth device to about 10 meters (32 feet). Both the printer and the device it communicates with must follow the Bluetooth standard. Other than conditions specified elsewhere in this manual, only one of the radio options can be installed in the printer at one time and the antenna used for these transmitters must not be co-located or must not operate in conjunction with any other antenna.

Bluetooth Networking Overview

Each Bluetooth enabled ZQ500 Series printer is identified by a unique Bluetooth Device Address (BDADDR). This address resembles a MAC address whereby the first three bytes are vendor, and the last three bytes are device (e.g. 00:22:58:3C:B8:CB). This address is labeled on the back of the printer via a barcode for ease of pairing. (See Page 34.) In order to exchange data, two Bluetooth enabled devices must establish a connection.

Bluetooth software is always running in the background, ready to respond to connection requests. One device (known as the master or the client) must request/initiate a connection with another. The second device (the slave or the server) then accepts or rejects the connection. A Bluetooth enabled ZQ500 Series printer will normally act as a slave creating a miniature network with the terminal sometimes referred to as a “piconet”.

Discovery identifies Bluetooth devices that are available for pairing whereby the master device broadcasts a discovery re- quest and devices respond. If a device is not discoverable, the master cannot pair unless in knows the BDADDR or has previously paired with the device.

Bluetooth 2.1 or higher uses Security Level 4 Secure Simple Pairing (SSP), a mandatory security architecture that features four (4) association models: Numeric Comparison, Passkey Entry, Just Works (no user confirmation), and Out of Band (pairing info transmitted OOB, e.g. via Near Field Communication).

Figure 11: Bluetooth Security Modes

Security Mode 1

If a BT>/= 2.1 device is pairing with a BT</= 2.0 device, it falls back to BT 2.0 compatibility mode and behaves the same as BT 2.0. If both devices are BT >/= 2.1, Secure Simple Pairing must be used according to the BT spec.

Security Mode 2

If a BT >/= 2.1 device is pairing with a BT </= 2.0 device, it falls back to BT 2.0 compatibility mode and behaves the same as BT 2.0. If both devices are BT >/= 2.1, Secure Simple Pairing must be used according to the BT spec.

Security Mode 3

If a BT >/= 2.1 device is pairing with a BT </= 2.0 device, it falls back to BT 2.0 compatibility mode and behaves the same as BT 2.0. If both devices are BT >/= 2.1, Secure Simple Pairing must be used according to the BT spec.

Security Mode 4: Simple Secure Pairing

Simple Secure Pairing: a new security architecture introduced supported in BT >= 2.1. Service-level enforced, similar to mode 2. Mandatory when both devices are BT >= 2.1. There are four association models currently supported by mode 4. Security requirements for services must be classified as one of the following: authenticated link key required, unauthenticated link key required, or no security required. SSP improves security through the addition of ECDH public key cryptography for protection against passive eavesdropping and man-in-the-middle (MITM) attacks during pairing.

Numeric Comparison	Passkey Entry	Just Works	Out of Band (OOB)
Designed for situation where both devices are capable of displaying a six-digit number and allowing user to enter “yes” or “no” response. During pairing, user enters “yes” if number displayed on both devices matches to complete pairing. Differs from the use of PINs in legacy (BT<=2.0) pairing because the number displayed for comparison is not used for subsequent link key generation, so even if it is viewed or captured by an attacker, it could not be used to determine the resulting link or encryption key.	Designed for situation where one device has input capability but no display (e.g. keyboard), while other device has a display. The device with a display shows a six-digit number, then the user enters this key on the device with input. As with numeric comparison, the six-digit number is not used in link key generation.	Designed for situation where one (or both) of the pairing devices has neither a display nor keyboard for entering digits (e.g. Bluetooth headset). It performs authentication step 1 in the same manner as as numeric comparison, but the user cannot verify that both values match, so MITM (man-in-the-middle) protection is not provided. This is the only model in SSP that does not provide authenticated link keys.	Designed for devices that support a wireless technology other than Bluetooth (e.g. NFC) for the purposes of device discovery and cryptographic value exchange. In the case of NFC, the OOB model allows devices to pair securely by simply tapping one device against the other, followed by the user accepting the pairing via a single button push. Security against eavesdropping and MITM attacks is dependant on the OOB technology.

Each mode, except for Just Works, has Man-In-The-Middle (MITM) protection, meaning no third device can view the data being passed between the two devices involved. The SSP mode is usually negotiated automatically based on the capabilities of both the master and slave. Lower security modes can be disabled via the `bluetooth.minimum _ security _ mode` SGD. The `bluetooth.minimum _ security _ mode` SGD sets the lowest security level at which the printer will establish a Bluetooth connection. The printer will always connect at a higher security level if requested by the master device. To change the security mode and security settings in the ZQ510 printer, use Zebra Setup Utilities.

Figure 12: Bluetooth Minimum Security Modes

	BT Version of Master Device (>2.1)
`bluetooth.minimum_security_mode=1`	**Secure Simple Pairing** **Just Works/Numeric Comparison**
`bluetooth.minimum_security_mode=2`	**Secure Simple Pairing** **Just Works/Numeric Comparison**
`bluetooth.minimum_security_mode=3`	**Secure Simple Pairing** **Numeric Comparison**
`bluetooth.minimum_security_mode=4`	**Secure Simple Pairing** **Numeric Comparison**
`bluetooth.bluetooth_PIN`	**Not Used**

`bluetooth.minimum _ security _ mode` ***sets the lowest security level at which the printer will establish a Bluetooth connection. The printer will always connect at a higher security level if requested by the master device.***

The ZQ500 Series printers also feature bonding for Bluetooth. The printer caches pairing info so devices stay paired through power cycles and disconnects. This eliminates the need to re-pair on every connection establishment.

The `bluetooth.bonding` SGD is on by default.

Note • For detailed information on Bluetooth, please refer to the Bluetooth Wireless User Guide (P1068791-001) at:
http://www.zebra.com/us/en/support-downloads.html

In addition, the ZQ500 Series printers support Near Field Communication (NFC) technology. Using the “Print Touch” feature located on the side of the printer, end-users can automatically connect via Bluetooth from a handheld device that supports NFC technology. The NFC tag has the printer’s BDADDR encoded in a URL on the tag. Simply touching the NFC handheld device to the “Print Touch” icon on the printer will connect and pair the handheld device to the printer.

WLAN Overview

ZQ500 Series printers can be equipped with a Dual Radio option, meaning a radio that uses both the industry standard 802.11 protocols and Bluetooth 3.0. All radios units are shipped with the 802.11n radio enabled (default) and the BT radio disabled. However, users have the option to enable BT if they wish to use the dual feature. They will have the FCC ID number on the serial number label on the back of the unit.

- ZQ500 Series Wireless Network Printers with the Zebra 802.11 WLAN radio module can be identified by the text "Wireless Network Printer" on the serial number label on the back of the printer.
- These printers allow communication as a node within a wireless local area network (WLAN). Methods of establishing communications to the printer will vary with each application.

More information and LAN configuration utilities are included in the Zebra Net Bridge™ program (version 2.8 and later). Zebra Setup Utilities (ZSU) can also be used to configure WLAN communications settings. Both Net Bridge and ZSU may be downloaded from the Zebra Web site.

Figure 13: BT/WLAN Communications

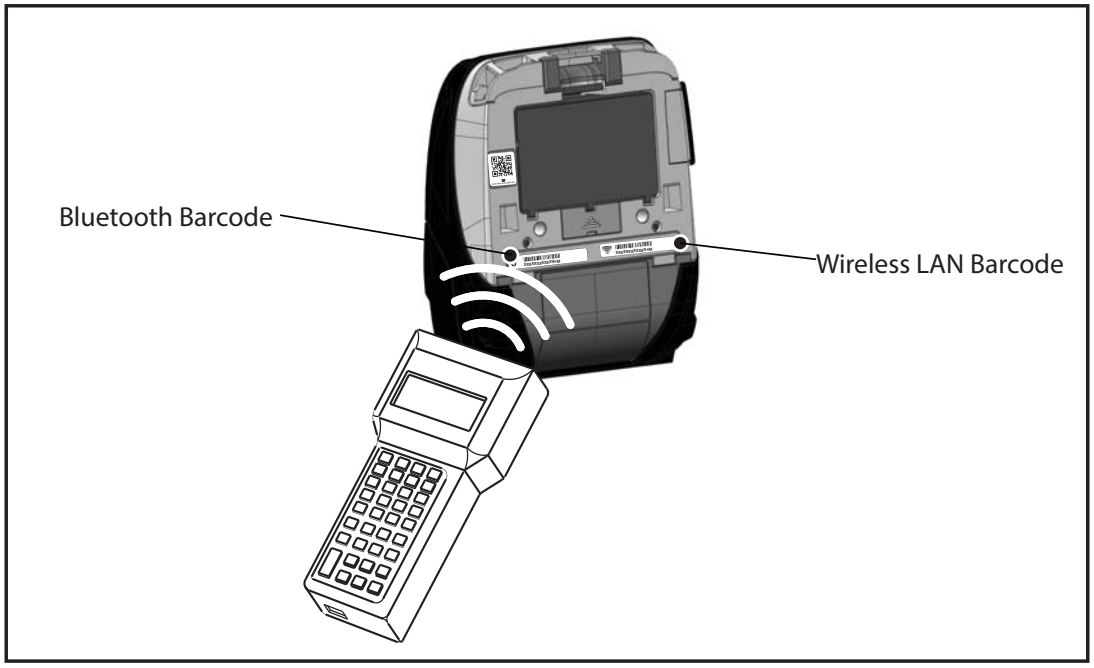

In order to obtain the Bluetooth address or the Wireless LAN address, use a mobile computer to scan the Bluetooth barcode or the WLAN barcode on the bottom of the printer where shown in Figure 13.

Setting Up the Software

ZQ500 Series printers use Zebra's CPCL and ZPL Programming languages which were designed for mobile printing applications. CPCL and ZPL are fully described in the ZPL Programming Guide (p/n P1012728-008) available on-line at www.zebra.com/manuals.

You can also use Designer Pro, Zebra's Windows® based label creation program which uses a graphical interface to create and edit labels in either language.

Refer to Appendix G for tips on downloading the Designer Pro application from Zebra's Web site.

Near Field Communication (NFC)

Much like Bluetooth and Wi-Fi technologies, Near Field Communication (NFC) allows wireless communication and data exchange between digital devices like smartphones. Yet NFC utilizes electromagnetic radio fields while technologies such as Bluetooth and Wi-Fi focus on radio transmissions instead.

NFC is an offshoot of Radio Frequency Identification (RFID), with the exception that NFC is designed for use by devices within close proximity to each other, i.e. a smartphone and a ZQ500 Series printer. NFC allows these devices to establish communication with each other by touching them together or bringing them into proximity, usually no more than 7.62 centimeters (3 inches). Three forms of NFC technology exist: Type A, Type B, and FeliCa. All are similar but communicate in slightly different ways. FeliCa is commonly found in Japan.

Devices using NFC may be *active* or *passive*. A passive device, such as a ZQ500 Series printer with an NFC tag, contains information that other devices can read but does not read any information itself. An active device, such as a smartphone, can read the information on the printer's NFC tag, but the tag itself does nothing except transmit the info to authorized devices.

Active devices can read information and send it. An active NFC device, like a smartphone, would not only be able to collect information from NFC tags, but it would also be able to exchange information with other compatible phones or devices. An active device could even alter the information on the NFC tag if authorized to make such changes.

To ensure security, NFC often establishes a secure channel and uses encryption when sending sensitive information.

Figure 14: Near Field Communication (NFC) Pairing

Note • Tapping the Zebra Print Touch™ icon with a Near Field Communication (NFC) enabled smartphone will provide instant access to printer-specific information. For more information about NFC and Zebra products, go to http://www.zebra.com/nfc.Bluetooth pairing applications via NFC is also possible. Please see Zebra Multi-platform SDK for more information.

ZQ500 Series Accessories

Belt Clip

The ZQ510 and ZQ520 printers come with a plastic Belt Clip (p/n P1063406-040) as a standard feature.

To use:

1. Slide the plastic Belt Clip securely onto your belt (Fig. 15).
2. Insert the hook on the belt clip into the opening of the printer's front bumper as shown.

Figure 15: Using the Belt Clip

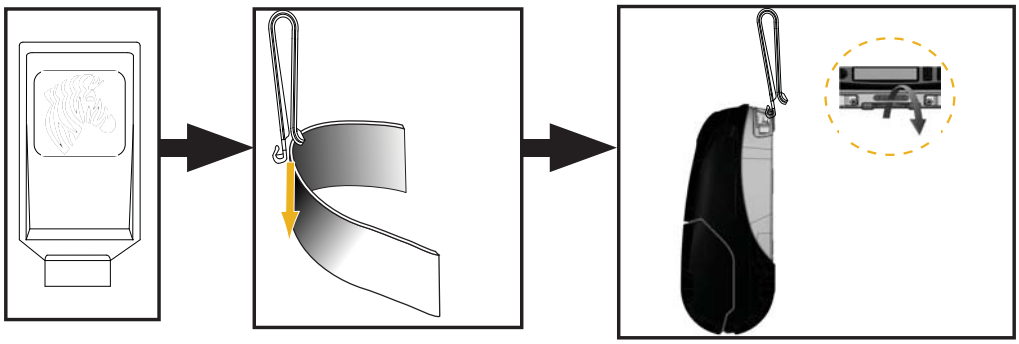

Hand Strap

The ZQ500 Series Hand Strap accessory (p/n BT16899-1) attaches to the front posts of the printer to provide the user with a convenient and secure method of carrying the printer. To attach the Hand Strap to the printer:

1. Attach one swivel snap hook to its corresponding post on the front of the printer (Fig. 16).
2. Attach the opposite end of the strap to its corresponding post on the front of the printer where shown.

Figure 16: Using the Hand Strap

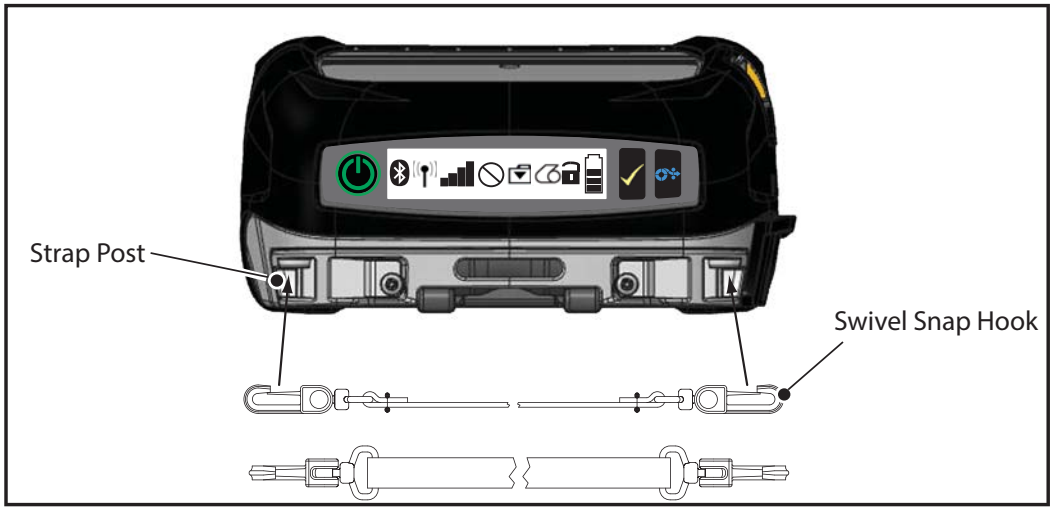

Shoulder Strap

A Shoulder Strap accesory (p/n P1063406-035) is also offered to provide another option for comfortably carrying the ZQ510 and ZQ520 printers. Similar to the Hand Strap, the shoulder strap attaches to the two (2) strap posts on the front of the printer via rugged swivel snap hooks as shown in Fig. 17. The strap is easily adjustable up to 56 inches from end to end.

Figure 17: Using the Shoulder Strap

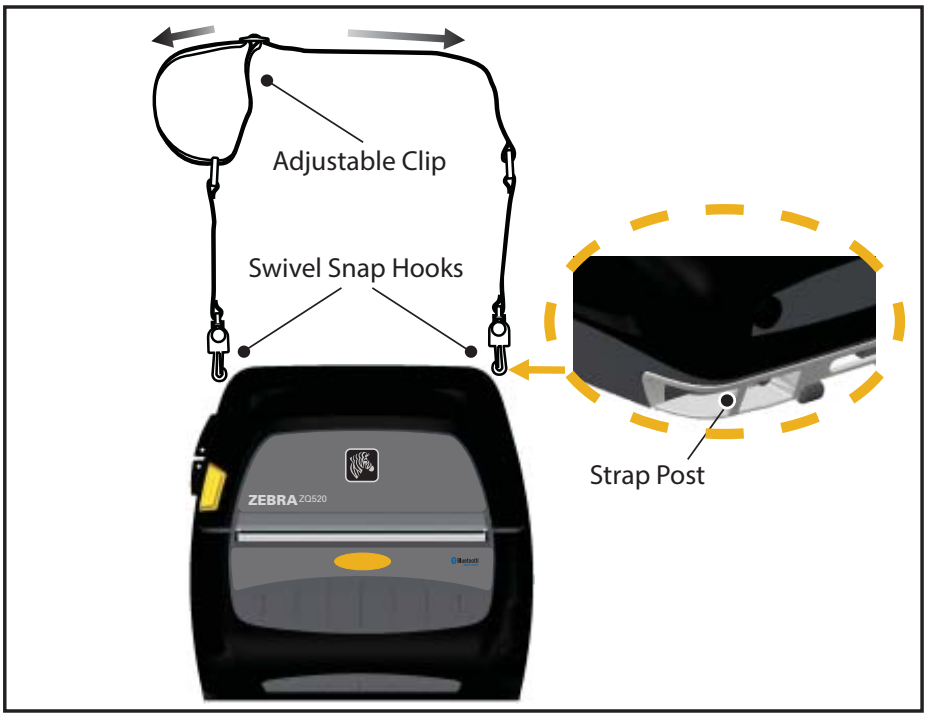

Soft Case

The ZQ500 Series printers have an environmental Soft Case option (P1063406-037/-038) that helps protect the printer, while also allowing the user to carry it from their belt. The paper path is left open to maintain printing capability and the controls are visible and accessible while in the case. D-Ring connectors allow for attachment to the shoulder strap option.

Exoskeleton

In order to provide extreme ruggedness for the ZQ500 Series printers, they come with an optional hard case, or “Exoskeleton” (p/n P1063406-043/-044). This case features a clam shell design whereby the printer is placed securely inside and the Exoskeleton is clamped shut. The Exoskeleton comes with a shoulder strap for easy portability.

All printer ports are inaccessible while the printer is in the hard case, but the printer control buttons can still be used (Fig. 18). The user will also be able to mount and charge the printer on the ZQ500 Series Vehicle Cradle and 4-Bay Power Station while in the hard case.

Note • Since linerless printers don’t have the reverse tear bar feature which allows media to be torn both upwards and downwards, it is recommended that linerless printers not be used with the Exoskeleton. Linerless media can only be torn down and the Exoskeleton is not resistant to the adhesive of the linerless media.

Figure 18: Using the Exoskeleton

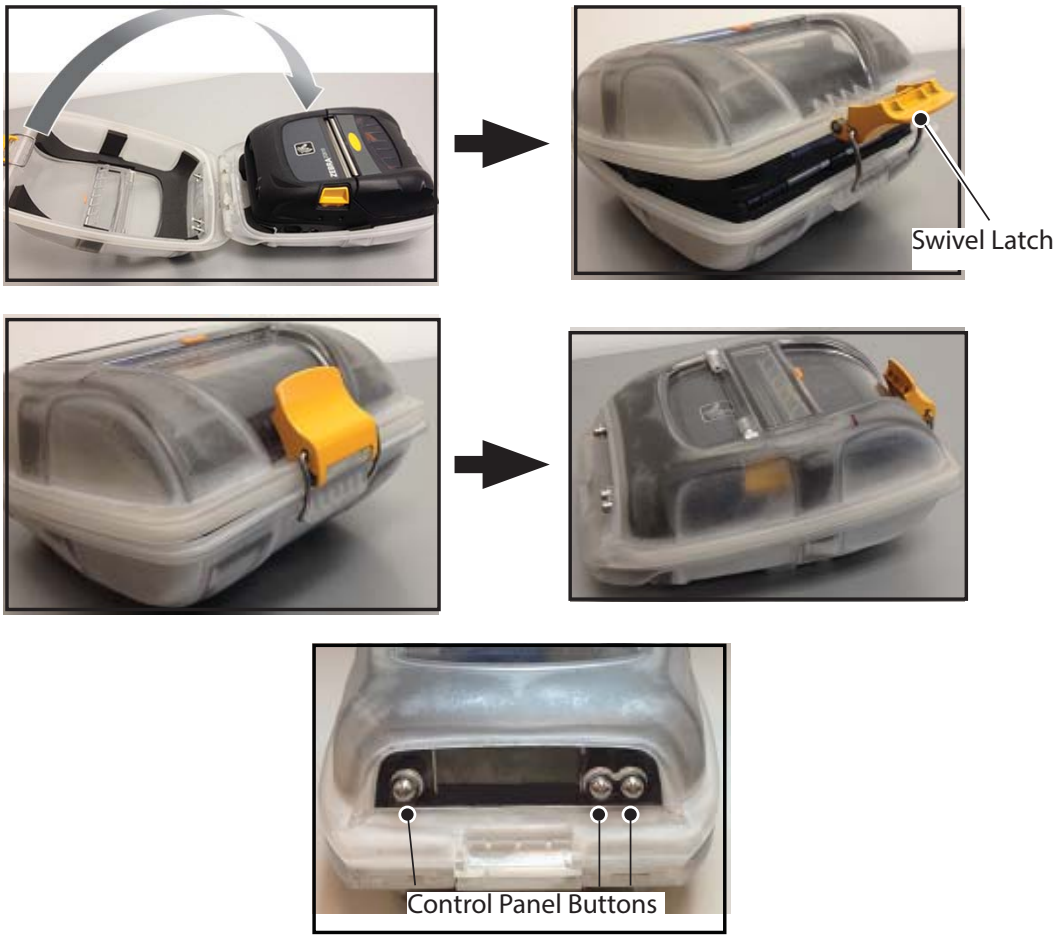

Mag Card Reader

The ZQ500 Series printers can be equipped with optional Magnetic Stripe reader (p/n P1063406-036). The magnetic stripe card reader allows the user to swipe magnetic stripe cards such as credit cards through a slot in the printer and then read and process the data contained in the card. The Mag Card reader is capable of reading all three (3) tracks simultaneously, but can be configured to read two (2) tracks if desired. The reader also features an audio indicator to alert users of a successful card swipe. The Mag Card reader can be encrypted by working with Zebra's Professional Services team and getting a key loaded.

The Mag Card reader is installed by removing the existing front bumper of the printer and replacing it with the Mag Card reader (as illustrated in Fig. 19 below).

Figure 19: Installing the Mag Card Reader

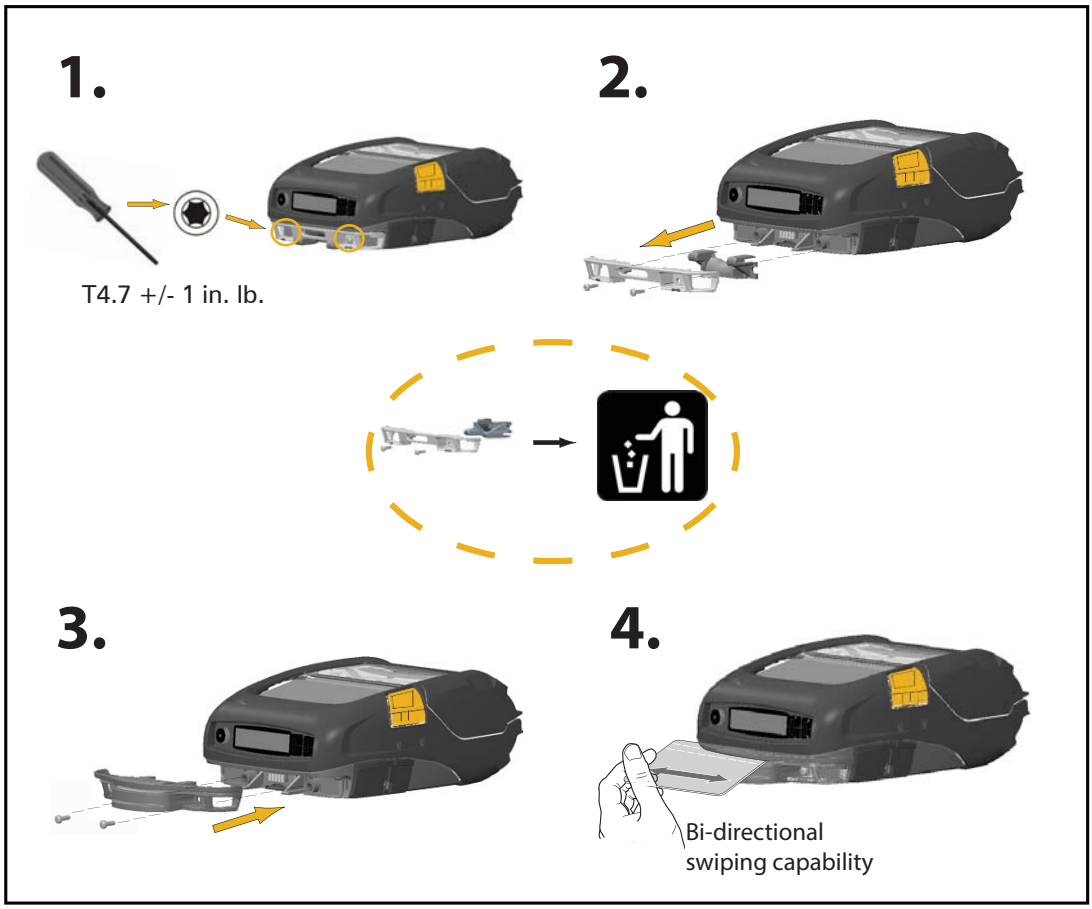

Note • For a complete list of accessories, see ZQ500 Series Accessories on Page 59.

Preventive Maintenance

Extending Battery Life

- Never expose the battery to direct sunlight or temperatures over 65° C (149° F).
- Always use a Zebra charger designed specifically for Lithium-Ion batteries. Use of any other kind of charger may damage the battery.
- Use the correct media for your printing requirements. An authorized Zebra re-seller can help you determine the optimum media for your application.
- If you print the same text or graphic on every label, consider using a pre-printed label.
- Choose the correct print darkness, and print speed for your media.
- Use software handshaking (XON/XOFF) whenever possible.
- Remove the battery if the printer won't be used for a day or more and you're not performing a maintenance charge.
- Consider purchasing an extra battery.
- Remember that any rechargeable battery will lose its ability to maintain a charge over time. It can only be recharged a finite number of times before it must be replaced. Always dispose of batteries properly. Refer to Appendix E for more information on battery disposal.

General Cleaning Instructions

Caution • Avoid possible personal injury or damage to the printer. Never insert any pointed or sharp objects into the printer. Always turn off the printer before performing any cleaning procedures. Use care when working near the tear bars as the edges are very sharp.

Warning • The printhead can get very hot after prolonged printing. Allow it to cool off before attempting any cleaning procedures.

Only use a Zebra cleaning pen (not supplied with the printer) or a cotton swab with alcohol for cleaning the printhead.

Caution • Use only cleaning agents specified in the following tables. Zebra Technologies Corporation will not be responsible for damage caused by any other cleaning materials used on this printer.

ZQ500 Series Cleaning

Area	Method	Interval
Printhead	Use a Zebra cleaning pen or 70% isopropyl alcohol on a cotton swab to clean the print elements from end to end (the print elements are located in the thin gray line on the printhead).	After every five rolls of media (or more often, if needed). When using linerless type media, cleaning is required after every roll of media.
Platen Surface (Linered and Linerless)	Rotate the platen roller and clean it thoroughly with the cleaning pen or 70% isopropyl alcohol and a cotton swab (Fig. 20a/Fig. 20b).	After every five rolls of media (or more often, if needed) Linerless media requires more frequent cleaning, i.e. after every roll.
Scraper (Linerless Units Only)	Use a cleaning pen to clean scraper on linerless units. (Fig. 20b)	After every five rolls of media (or more often, if needed).
Tear Bars	Clean thoroughly with the cleaning pen or 70% isopropyl alcohol and a cotton swab. (Fig. 20a)	As needed
Printer Exterior	Water-dampened cloth or 70% Isopropyl alcohol wipe.	As needed
Printer Interior	Brush/air blow. Ensure the Bar Sensor and Gap Sensor windows are free of dust. (Fig. 20a)	As needed
Interior of units with Linerless Platens	Clean thoroughly with the cleaning pen or 70% isopropyl alcohol and a cotton swab. (See Fig. 20b for specific target areas for interior cleaning.)	After every five rolls of media (or more often, if needed).

Figure 20a: Cleaning the ZQ500 Series Printers (Linered)

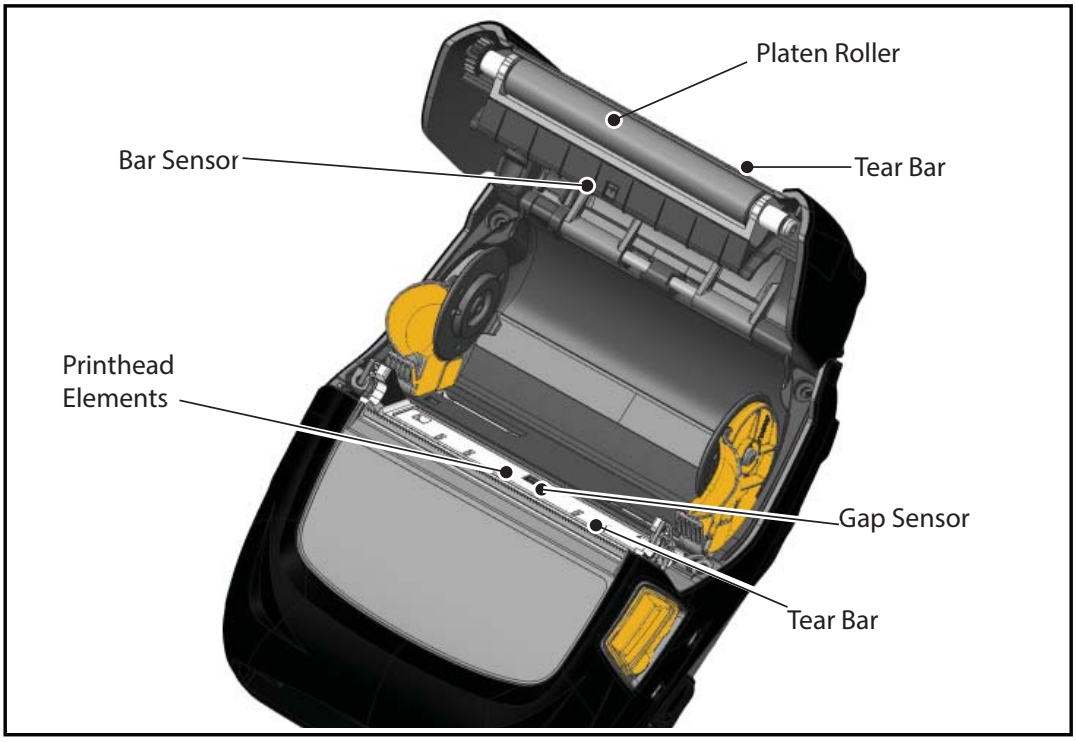

Figure 20b: Cleaning the ZQ500 Series Printers (Linerless)

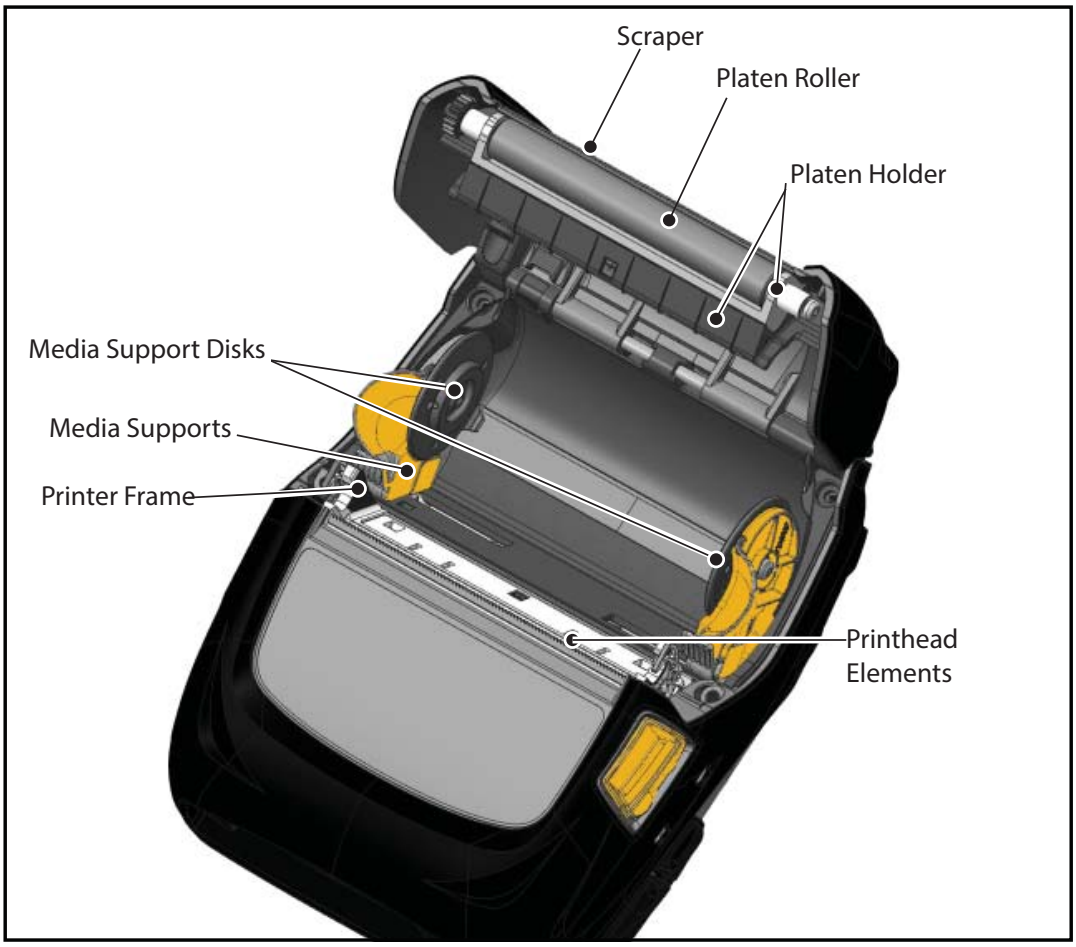

Troubleshooting

Front Control Panel

If the printer is not functioning properly, refer to the table below to determine the state of the LED indicator ring located around the Power button.

Green	Yellow	Red	Indication
Solid	Off	Off	Charged Battery Battery Eliminator in Use
Off	Solid	Off	Battery Charging
Blinking	Off	Off	Sleep Mode
Off	Off	Solid	Battery Fault

Printer Status Indicators

The printer's control panel displays multiple icons which indicate the status of various printer functions. Check the indicator status and then refer to the Troubleshooting topic referenced on the following pages to resolve the problem.

Icon	Status	Indication
	On	Bluetooth link established
	Grayed Out	Inactive
	Blinking	Receiving printer data
	Not Present	No WLAN radio detected
	Antenna Blinking	Looking for AP
	Antenna Blinking/1 Parenthesis Solid	WLAN Associated/Attempting Authentication
	Antenna and 2 Parentheses Solid	WLAN Associated and Authenticated
	Antenna and 2 Parentheses Blinking	Receiving Data
	4 Bars	802.11 Signal Strength >75%
	3 Bars	802.11 Signal Strength </=75%
	2 Bars	802.11 Signal Strength </= 50% but >25%
	1 Bar	802.11 Signal Strength </= 25%
	0 Bars	No signal strength
	Not Present	No error condition
	Blinking	Error condition (excluding Latch Open or Media Out)

Icon	Status	Indication
	Blinking	Data processing in progress
	Steady	No data being received
	Blinking	Out of media
	Steady	Media present
	Blinking	Media cover open
	4 Bars	>80% charged
	3 Bars	60%-80% charged
	2 Bars	40%-60% charged
	1 Bar	20%-40% charged
	0 Bars	Low Battery
DC	On	Battery Eliminator present (Replaces Battery icons)
	On (Media Out icon Off)	Printer in Segmentation Mode
	On (Media Out icon Off)	Printer in Draft Mode

Troubleshooting Topics

1. No power:

- Check that battery is installed properly.
- Recharge or replace battery as necessary.
- If using battery eliminator, ensure that it is connected properly to power source

Always dispose of batteries properly. Refer to Appendix F for more information on proper battery disposal.

2. Media does not feed:

- Be sure media cover is closed and latched.
- Check spindle holding media for any binding.
- Ensure label sensor is not blocked.

3. Poor or faded print:

- Clean print head.
- Check quality of media.

4. Partial or missing print:

- Check media alignment.
- Clean print head.
- Ensure media cover is properly closed and latched.

5. Garbled print:

- Check baud rate.

6. No print:

- Check baud rate.
- Replace battery.
- Establish RF Link and/or restore LAN associativity.
- Invalid label format or command structure. Place printer in Communications Diagnostic (Hex Dump) Mode to diagnose problem.

7. Reduced battery charge life:

- If battery is older than 1 year old, short charge life may be due to normal aging.
- Check battery health.
- Replace battery.

8. flashing:

- Flashing Data icon is normal while data is being received.

9. or flashing:

- Check that media is loaded and that the media cover is closed and securely latched.

10. Communication error:

- Check baud rate.
- Replace cable to terminal.

11. Paper jam:

- Open head release latch and media cover.
- Remove and reinstall media.

12. Blank LCD screen:

- Make sure printer is turned on.
- No application loaded or application corrupted: reload program.
- Check LED ring around Power button to see if it's blinking yellow. indicating the printer is in sleep mode. Press Power or Select buttons to "wake up" the printer.

13. Magnetic Strip Card Won't Read

- Ensure card is inserted with the magnetic stripe facing in the correct direction.
- Check card for excessive wear or damage to the magnetic strip.

14. No NFC Connectivity

- Ensure smartphone is positioned 3 inches (7.62 cm) or closer to the Print Touch icon on the side of the printer.

Troubleshooting Tests

Printing a Configuration Label

To print out a listing of the printer's current configuration follow these steps:

1. Turn the printer off. Load the media compartment with journal media (media with no black bars printed on the back).
2. Press and hold the Feed Button.
3. Press and release the Power button and keep the Feed button pressed. When printing starts, release the Feed button.

Communications Diagnostics

If there is a problem transferring data between the computer and the printer, try putting the printer in the Communications Diagnostics Mode (also referred to as the "DUMP" mode). The printer will print the ASCII characters and their text represen- tation (or the period '.', if not a printable character) for any data received from the host computer.

To enter Communications Diagnostics Mode:

1. Print a configuration label as described above.
2. At the end of the diagnostics report, the printer will print: “Press FEED key to enter DUMP mode”.
3. Press the FEED key. The printer will print: “Entering DUMP mode”.

Note • If the FEED key is not pressed within 3 seconds, the printer will print “DUMP mode not entered” and will resume normal operation.

4. At this point, the printer is in DUMP mode and will print the ASCII hex codes of any data sent to it, and their text representation (or “.” if not a printable character).

Additionally, a file with a “.dmp” extension containing the ASCII information will be created and stored in the printer’s memory. It can be viewed, “cloned” or deleted using the Net Bridge application. (Refer to the Net Bridge documentation for more information.)

To terminate the Communications Diagnostics Mode and return the printer to normal operations:

1. Turn the printer OFF.
2. Wait 5 seconds.
3. Turn the printer ON.

Contacting Technical Support

If the printer fails to print the configuration label, or you encounter problems not covered in the Troubleshooting Guide, contact Zebra Technical Support. Technical Support addresses and phone numbers for your area can be found in Appendix H of this manual. You will need to supply the following information:

- Model number and type (e.g. ZQ510)
- Unit serial number (Found on the large label on the back of the printer, also found in the configuration label printout.
- Product Configuration Code (PCC) (15 digit number found on the label on the back of the unit)

Figure 21a: ZQ500 Series Configuration Label (ZQ510 Shown)

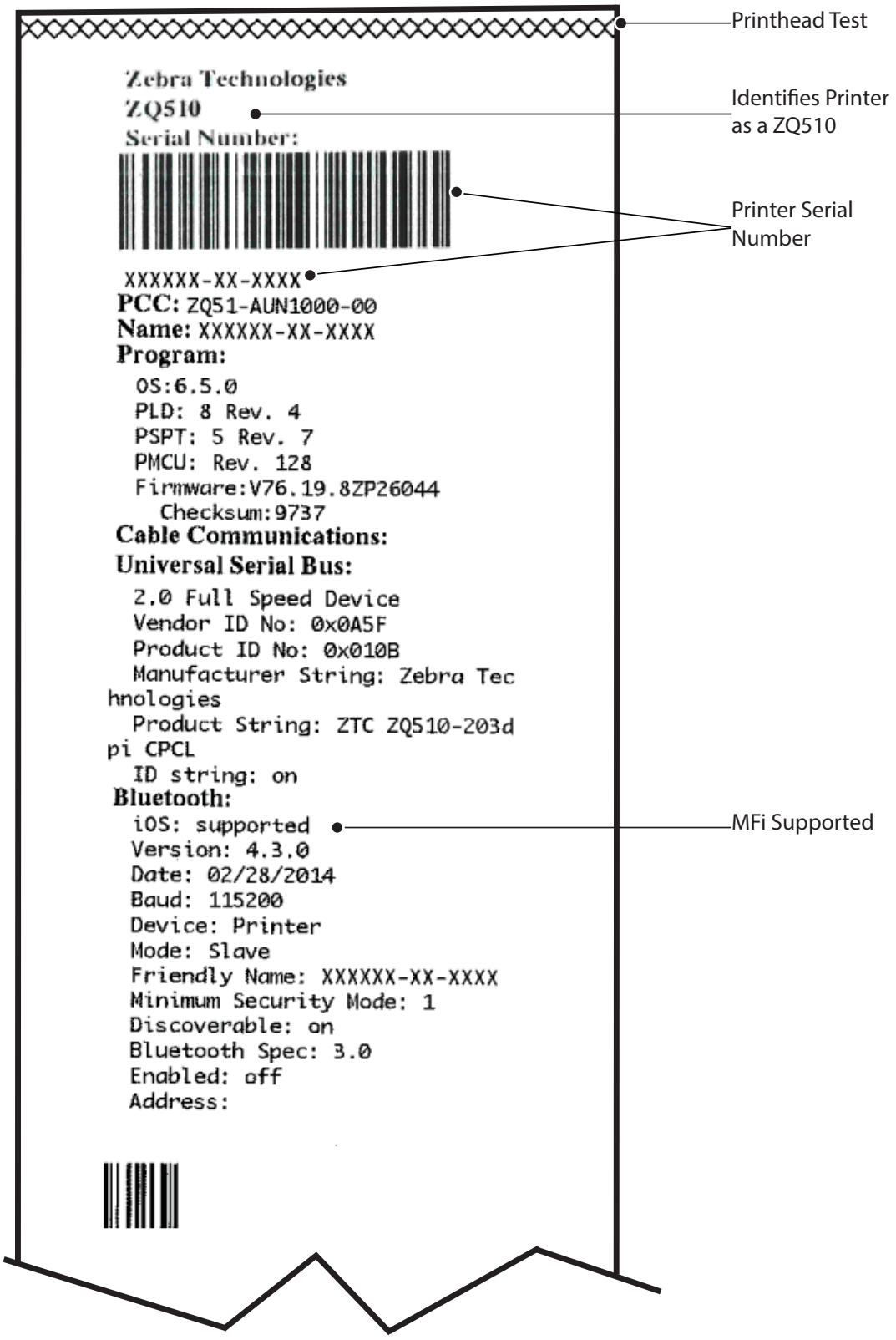

Figure 21b: ZQ500 Series Configuration Label (cont.)

Wireless:
Radio: 802.11 a/b/g/n
Region: usa/canada
Country: usa/canada
Enabled: on
MAC Address: 00:22:58:62:3a:6e
IP Address: 0.0.0.0
Netmask: 255.255.255.0
Gateway: 0.0.0.0
Operating Mode: infrastructure
International Mode: off
Preamble Length: long
Security: none
Stored ESSID: TestLanOpen
Associated: no
DHCP: on
DHCP CID type: 1
DHCP CID: 002258623a6e
Power Save: on

802.11 radio option /n installed. This section details the radio's network settings

Active Network Information:
Active Network: Unknown
IP Address: 0.0.0.0
Netmask: 255.255.255.0
Gateway: 0.0.0.0
TCP Port: 6101
Alternate TCP Port: 9100
TCP JSON Config Port: 9200
UDP Port: 6101
Remote Server:
Remote Server Port: 10013
TCP: on
UDP: on
LPD: on
DHCP: on
BOOTP: off
FTP: on
HTTP: on
SMTP: on
POP3: off
SNMP: on
TELNET: on
MIRROR: off
UDP Discovery: on
Weblink:
DHCP CID type: 1
DHCP CID: 002258623a6e

Network Information

Product support website:
http://zebra.com/zq500-info

Scan QR code to go to ZQ500 Series product support website

Peripherals:
MCR: Not installed
LCD: Installed

Peripherals Installed

Figure 21c: ZQ500 Series Configuration Label (cont.)

```
Power Management:
  In-activity Timeout:0 Secs
  Low-battery Timeout:60 Secs
  Remote(DTR) pwr-off:Disabled
  Voltage          :8.12
  Low-bat Warning  :
  Low-bat Shut-down:
  Power On Cycles  :156
  Battery Health   :good
  Battery Cycle Count:1
Memory:
  Flash :67108864 Bytes
  RAM   :8388608 Bytes
Label:
  Width :576 dots, 72 mm
  Height:65535 dots, 8191 mm
Sensors: (Adj)
  Pres[DAC:,Thr:60,Cur:0]
    Label Removed
  Media [48 (384 dots)]
  Gap [DAC:161,Thr:75,Cur:132]
  Bar [DAC:128,Thr:128,Cur:79]
  Temperature :31C (56)
  Voltage     :7.8V (208)
Resident Fonts:
   Font     Sizes Chars
   -------- ----- -----
    0       0- 6  20-FF
    1       0     20-80
    2       0- 1  20-59
    4       0- 7  20-FF
    5       0- 3  20-FF
    6       0     20-44
    7       0- 1  20-FF
File Directory:
   File            Size
   -------------- ---------
   E:MCU_08_DEV0.BIN      7168
   E:MEMREAD          19344
   E:MEMWRITE         19653
   E:TT0003M_.TTF    169188
   E:TWIREAD          23079
   E:TWIWRITE         16446
  66852352 Bytes Free
Command Language:
  CCL Key '!'[21]
ZPL Configuration Information:
  Rewind...........Print Mode
  Gap/Notch........Media Type
  10.0.............Darkness
  +00.........Tear Off Adjust
  2030...........Label Length
  48mm............Print Width
  7Eh..........Control Prefix
  5Eh...........Format Prefix
  2Ch...............Delimiter
  00.............Top Position
  No Motion....Media Power Up
  Feed......Media Head Closed
  00..............Left Margin
  384............Dots per row
 End ZPL Configuration

 End of report.


 Press FEED key to
 enter DUMP mode.


  Dump mode not entered.
```

Flash and RAM Memory Installed

Maximum Label Size

Resident Human Readable Fonts Installed

Files loaded in printer memory (includes pre-scaled or scalable fonts)

Specifications

Note • Printer specifications are subject to change without notice.

Printing Specifications

Parameter	ZQ510	ZQ520
Print Width	Max 72 mm (2.83 in.)	Max 104 mm (4.09 in.)
Print Speed	101.6 mm (4 in.)/second @ 12% max density	88.9 mm (3.5 in.)/second @ 12% max density
	76.2 mm (3 in.)/second @ 16% max density (linerless media)	76.2 mm (3 in.)/second @ 16% max density (linerless media)
Printhead Burn Line to Tear Edge Distance	4.8 mm (0.18 in.) +/- 0.5 mm (0.02 in.)	4.8 mm (0.18 in.) +/- 0.5 mm (0.02 in.)
Printhead Life	600,000 inches Mean Time to Failure of output at 18% density at 20C using virgin media	600,000 inches Mean Time to Failure of output at 18% density at 20C using virgin media
Print Density	203 dots/in. or better	203 dots/in. or better

Memory and Communications Specifications

Parameter	ZQ510	ZQ520
Flash Memory	512 MB	512 MB
RAM Memory	256 MB	256 MB
Standard Communications	USB (Micro AB on the go)	USB (Micro AB on the go)
Wireless Communication	Dual Mode Bluetooth 2.1+EDR/4.0 Low Energy	Dual Mode Bluetooth 2.1+EDR/4.0 Low Energy
	Dual Radio (BT 3.0/802.11 a/b/g/n)	Dual Radio (BT 3.0/802.11 a/b/g/n)

Label Specifications

Parameter	ZQ510	ZQ520
Media Width	35 mm (1.38 in.) to 80 mm (3.15 in.)	70 mm (2.75 in.) to 113 mm (4.45 in.)
Media Length	12.5 mm (0.5 in.) minimum	12.5 mm (0.5 in.) minimum
Black Bar Sensor to Printhead Burnline Distance	16 mm (0.62 in.) +/- 0.6 mm (0.02 in.)	0.62 in. (16 mm) +/- 0.6 mm (0.02 in.)
Media Thickness	0.058 mm (0.002 in.) to 0.161 mm (0.006 in.)	0.058 mm (0.002 in.) to 0.161 mm (0.006 in.)
Max Tag Thickness	0.139 mm (0.005 in.)	0.139 mm (0.005 in.)
Max Roll Outer Diameter	51 mm (2.0 in.)	57 mm (2.25 in.)
Inner Core Diameters	19 mm (0.75 in.) standard 12.5 mm (0.5 in.) optional*	19 mm (0.75 in.) standard 12.5 mm (0.5 in.) optional*
Black Mark Location	Centered on media roll	Centered on media roll
Black Mark Dimensions	L: 2.4 mm to 11.0 mm (0.09 in. to 0.43 in.) W: 12.7 mm (0.5 in.)	L: 2.4 mm to 11.0 mm (0.09 in. to 0.43 in.) W: 12.7 mm (0.5 in.)

Note • Customers who want to use the 12.5 mm (0.5 in.) core size will be required to uninstall the media disks and install new media support disks (p/n P1063406-025).

CPCL Font and Bar Code Specifications and Commands

Standard Fonts	25 bit-mapped fonts; 1 scalable font (CG Trimvirate Bold Condensed*) *Contains Monotype UFST from downloadable optional bit-mapped & scalable fonts via Net Bridge software.	
Available Optional Fonts	Optional International character sets: Chinese 16 x 16 (trad), 16 x 16 (simplified),24 x 24 (simplified); Japanese 16 x 16, 24 x 24	
Linear Bar Codes Available	**Barcode (CPCL Command)**	
	Aztec (AZTEC) Codabar (CODABAR, CODABAR 16) UCC/EAN 128 (UCCEAN128) Code 39 (39, 39C, F39, F39C) Code 93 (93) Code 128 (128) EAN 8, 13, 2 and 5 digit extensions (EAN8, EAN82, EAN85, EAN13, EAN132, and EAN135) EAN-8 Composite (EAN8) EAN-13 Composite (EAN13) Plessey (PLESSEY) Interleaved 2 of 5 (I2OF5) MSI (MSI, MSI10, MSI1110) FIM/POSTNET (FIM) TLC39 (TLC39) UCC Composite A/B/C (128(Auto)) UPCA, 2 and 5 digit extensions (UPCA2 and UPCA5) UPCA Composite (UPCA) UPCE, 2 and 5 digit extensions (UPCE2 and UPCE5) UPCE Composite (UPCE) MaxiCode (MAXICODE) PDF 417 (PDF-417) Datamatrix (using ZPL emulation) (DATAMATRIX) QR Code (QR)	
2-D Bar Codes Available	RSS:	RSS-14 (RSS-Subtype 1) RSS-14 Truncated (RSS-Subtype 2) RSS-14 Stacked (RSS-Subtype 3) RSS-14 Stacked Omnidirectional (RSS-Subtype 4) RSS Limited (RSS-Subtype 5) RSS Expanded (RSS-Subtype 6)
Rotation Angles	0°, 90°, 180°, and 270°	

ZPL Font and Bar Code Specifications and Commands

Standard Fonts	15 bit-mapped fonts; 1 scalable font (CG Trimvirate Bold Condensed*) Downloadable optional bit-mapped & scalable fonts via Net Bridge software.
Available Optional Fonts	Zebra offers font kits covering multiple languages including Simplified and Traditional Chinese, Japanese, Korean, Hebrew/Arabic, and others.
Linear Bar Codes Available **2-D Bar Codes Available**	**Barcode (CPCL Command)** Aztec (^B0) Codabar (^BK) Codablock (^BB) Code 11 (^B1) Code 39 (^B3) Code 49 (B4) Code 93 (^BA) Code 128 (^BC) DataMatrix (^BX) EAN-8 (^B8) EAN-13 (^BE) GS1 DataBar Omnidirectional (^BR) Industrial 2 of 5 (^BI) Interleaved 2 of 5 (^B2) ISBT-128 (^BC) LOGMARS (^BL) Micro-PDF417 (^BF) MSI (^BM) PDF-417 (^B7) Planet Code (^B5) Plessey (^BP) Postnet (^BZ) Standard 2 of 5 (^BJ) TLC39 (^BT) UPC/EAN extensions (^BS) UPC-A (^BU) UPC-E (^B9) Maxi Code (^BD) QR Code (^BQ)
Rotation Angles	0°, 90°, 180°, and 270°

Communication Port

USB

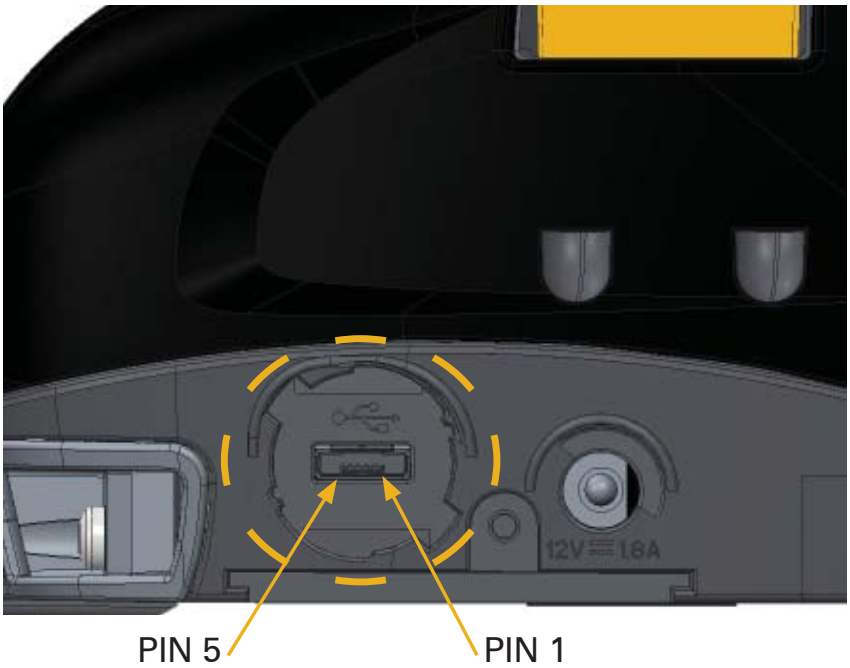

PIN 1: VBUS
PIN 2: DM(-)
PIN 3: DP(+)
PIN 4: ID
PIN 5: GND

Physical, Environmental and Electrical Specifications

Parameter	ZQ510	ZQ520
Weight w/ battery	1.38 lbs. (22 oz)	1.72 lbs. (27.5 oz)
Temperature	Operating: -20 °C to 55 °C (-4 °F to 131 °F)	Operating:-20 °C to 55 °C (-4 °F to 131 °F)
	Storage: -30 °C to 66 °C (-22 °F to 150.8 °F)	Storage: -30 °C to 66 °C (-22 °F to 150.8 °F)
	Charging: 0 °C to 40°C (32 °F to 104 °F)	Charging: 0 °C to 40°C (32 °F to 104 °F)
Relative Humidity	Operating: 10% to 90% non-condensing	Operating: 10% to 90% non-condensing
Battery	Smart Battery (2 cell or 4 cell) Lithium-Ion, 7.4 VDC (nominal); 2.45 AHr min.	Smart Battery (2 cell or 4 cell) Lithium-Ion, 7.4 VDC (nominal); 2.45 AHr min.
Intrusion Protection (IP) Rating	IP54 (with and without optional environmental case)	IP54 (with and without optional environmental case)

Figure 22: ZQ510 Overall Dimensions

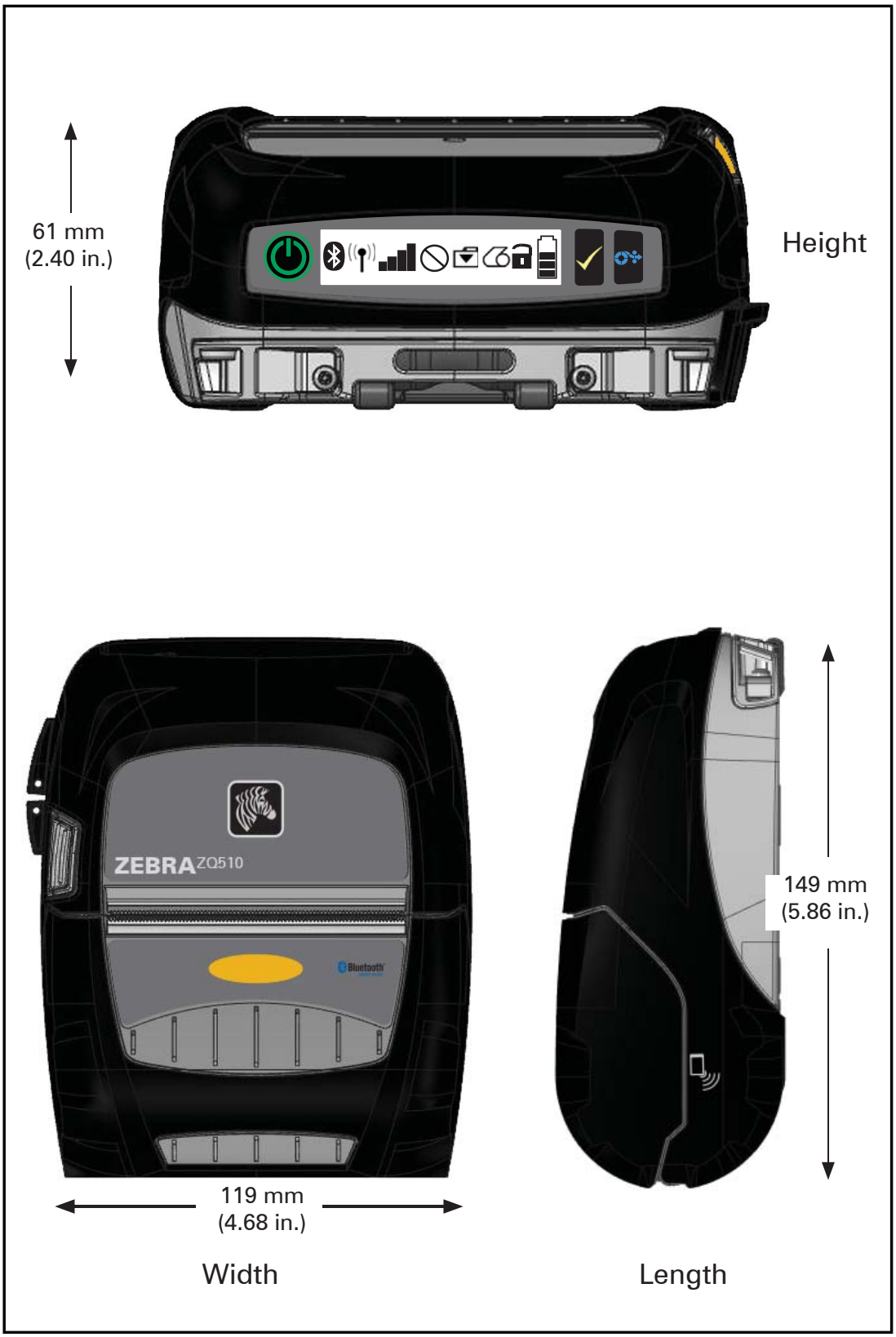

Figure 23: ZQ520 Overall Dimensions

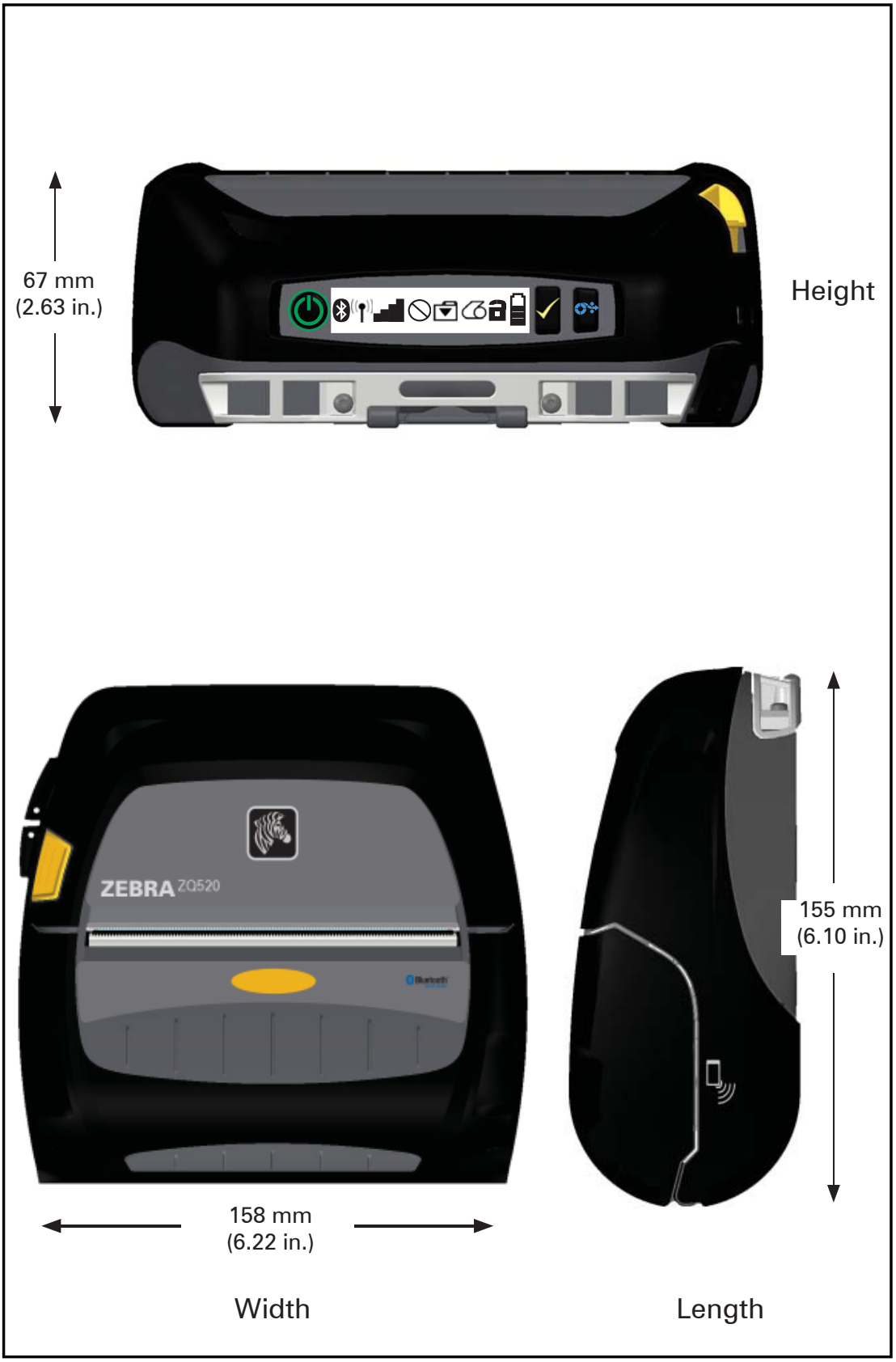

ZQ500 Series Accessories

Part #	Description
P1063406-025	KIT, Acc .5” Media Disk Support, ZQ500 Series
P1063406-026	KIT, Acc Swivel Lock Adapter, ZQ500 Series
P1063406-027	KIT, Acc 4-BAY Power Station, ZQ500 Series
P1063406-028	KIT, Acc Battery Eliminator Cradle, ZQ500 Series
P1063406-029	KIT, Acc Vehicle Cradle, ZQ500 Series
P1063406-030	KIT, Acc DC-DC vehicle adapter, open ended, 12~24V
P1063406-031	KIT, Acc DC-DC vehicle adapter, CIG, 12~24V
P1063406-032	KIT, Acc Battery Eliminator, ZQ500 Series
P1063406-033	KIT, Acc Power Adapter for Mobile Battery Eliminator, 12~48V, Cigarette Lighter
P1063406-034	KIT, Acc Convert Cable, 6 inch, ZQ500 Series
P1063406-035	KIT, Acc Rugged Shoulder Strap with Metal Clips, 56 inch
P1063406-036	KIT, Acc Mag Card Reader, ZQ500 Series
P1063406-037	KIT, Acc Soft Case, ZQ510
P1063406-038	KIT, Acc Soft Case, ZQ520
P1063406-039	KIT, Acc 2-roll Media Storage Case
P1063406-040	KIT, Acc Belt Clip, ZQ500 Series
P1063406-041	KIT, Acc D-Ring Adapter Belt Attachment Strap, ZQ500 Series
P1063406-042	KIT, Acc RAM Arm Mounting Plate, ZQ500 Series
P1063406-043	KIT, Acc Exoskeleton Case with Shoulder Strap, ZQ510
P1063406-044	KIT, Acc Exoskeleton Case with Shoulder Strap, ZQ520
P1063406-045	KIT, Acc Micro,USB,B, to,USB,A,Plug,1.8M, ZQ500 Series
P1063406-046	KIT, Acc Micro,USB,B to USB,A,Plug, 3.5M, ZQ500 Series
P1063406-047	KIT, Acc Micro,USB,A to USB,A, Rec., ZQ500 Series
AC18177-5	Model UCLI72-4 Quad Battery Charger (US line cord, see Sales for others)
BT16899-1	Hand Strap
P1031365-024	KIT ACC QLn AC Adapter US (type A) cord
P1031365-059	KIT ACC QLN220/QLN320 Spare Battery Smart
P1031365-063	Kit ACC SC2 Li-ION Smart Charger, US (type A) cord
P1031365-069	KIT, Acc QLn2/3 and ZQ500 Series Spare Extended Battery

Appendix A

USB Cables

Part Number P1069394; MICRO,USB,A,TO,USB A, REC

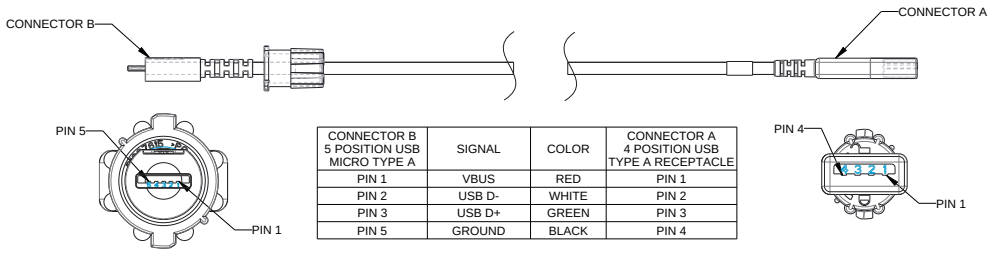

CONNECTOR B 5 POSITION USB MICRO TYPE A	SIGNAL	COLOR	CONNECTOR A 4 POSITION USB TYPE A RECEPTACLE
PIN 1	VBUS	RED	PIN 1
PIN 2	USB D-	WHITE	PIN 2
PIN 3	USB D+	GREEN	PIN 3
PIN 5	GROUND	BLACK	PIN 4

Part Numbers P1069329-001/-002; MICRO,USB,B,TO,USB,A,PLUG,1.8M/3.5M

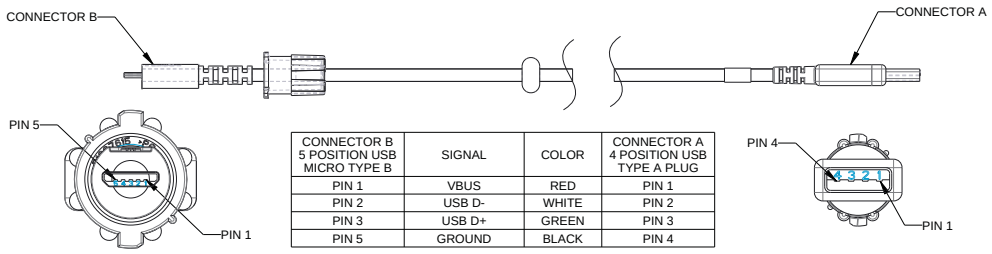

CONNECTOR B 5 POSITION USB MICRO TYPE B	SIGNAL	COLOR	CONNECTOR A 4 POSITION USB TYPE A PLUG
PIN 1	VBUS	RED	PIN 1
PIN 2	USB D-	WHITE	PIN 2
PIN 3	USB D+	GREEN	PIN 3
PIN 5	GROUND	BLACK	PIN 4

Note • Visit the Zebra website at: www.zebra.com/accessories for a listing of interface cables for all Zebra mobile printers.

Appendix B

Alert Messages

The ZQ500 Series printers will display the following alert messages to inform the user of various fault conditions that might occur with the ZQ510 and 520 printers.

Message	Text Line One	Text Line Two
HeadOverTemp	PRINT HEAD OVERTEMP	PRINTING HALTED
HeadMaintenanceNeeded	HEAD MAINTEN. NEEDED	PRINTING HALTED
BatteryHealthReplace	BATTERY DIMINISHED	CONSIDER REPLACING
BatteryHealthNearDeath	WARNING - BATTERY	IS PAST USEFUL LIFE
BatteryHealthShutdown	REPLACE BATTERY	SHUTTING DOWN
BatteryAuthenticationFail	BATTERY FAILED	REPLACE BATTERY
BatteryOverTemp	CHARGING TEMP FAULT	MUST BE 0-40°C
BatteryUnderTemp	CHARGING TEMP FAULT	MUST BE 0-40°C
BatteryChargeFault	CHARGING FAULT	REPLACE BATTERY
DownloadingFirmware	DOWNLOADING	FIRMWARE
BadFirmwareDownload	DOWNLOAD FAILED	PLEASE REBOOT
WritingFirmwareToFlash	FIRMWARE	WRITING TO FLASH
Mirroring	LOOKING FOR UPDATES	PLEASE WAIT...
MirroringApplication	RECEIVING FIRMWARE	DO NOT POWER OFF!
MirroringCommands	MIRRORING COMMANDS	
MirroringFeedback	SENDING FEEDBACK	PLEASE WAIT...
MirrorProcessingFinished	MIRROR PROCESSING	FINISHED
WlanInvalidChannels	WIRELESS ERROR	INVALID CHANNEL
WlanInvalidSecurityMode	WIRELESS ERROR	INVALID SECURITY
PauseRequest	PRINTER PAUSED	
CancelAll	ALL JOBS CLEARED	
CancelOne	ONE JOB CLEARED	
OutOfMemoryStoringGraphic	OUT OF MEMORY	STORING GRAPHIC
OutOfMemoryStoringFont	OUT OF MEMORY	STORING FONT
OutOfMemoryStoringFormat	OUT OF MEMORY	STORING FORMAT
OutOfMemoryStoringBitmap	OUT OF MEMORY	STORING BITMAP
AckAlertTooManyUsbHostDevices	TOO MANY MASS	STORAGE DEVICES
AckAlertUnsupportedUsbHostDevice	UNSUPPORTED USB	HOST DEVICE
AckAlertUnsupportedUsbHostFilesystem	UNSUPPORTED USB	HOST FILESYSTEM

Appendix C

Media Supplies

To insure maximum printer life and consistent print quality and performance for your individual application, it is recommended that only media produced by Zebra be used.

Advantages include:

- Consistent quality and reliability of media products.
- Large range of stocked and standard formats.
- In-house custom format design service.
- Large production capacity which services the needs of many large and small media consumers including major retail chains world wide.
- Media products that meet or exceed industry standards.

For more information go the Zebra website (www.zebra.com) and select the Products tab, or refer to the CD included with the printer.

Appendix D

Maintenance Supplies

In addition to using quality media provided by Zebra, it is recommended that the printer be cleaned as prescribed in the maintenance section. The following item is available for this purpose:

- Cleaning Pen (12 pack): p/n 105950-035

Appendix E

Serial Number and PCC Number Locations

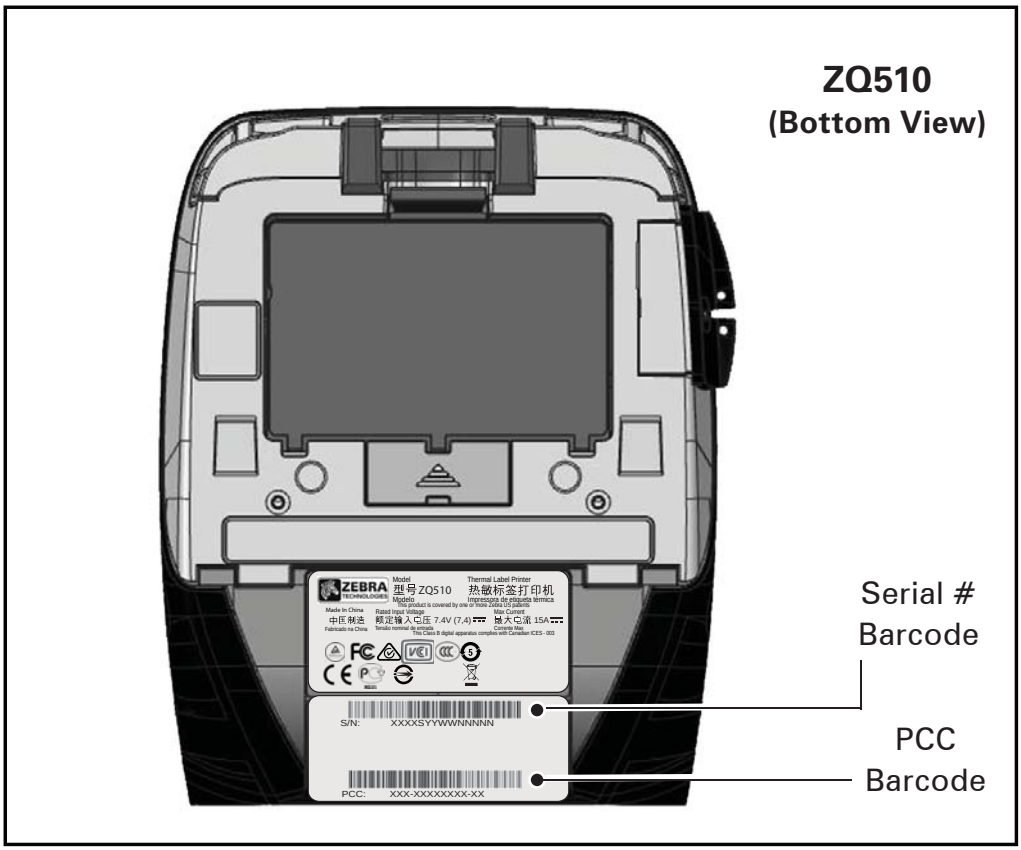

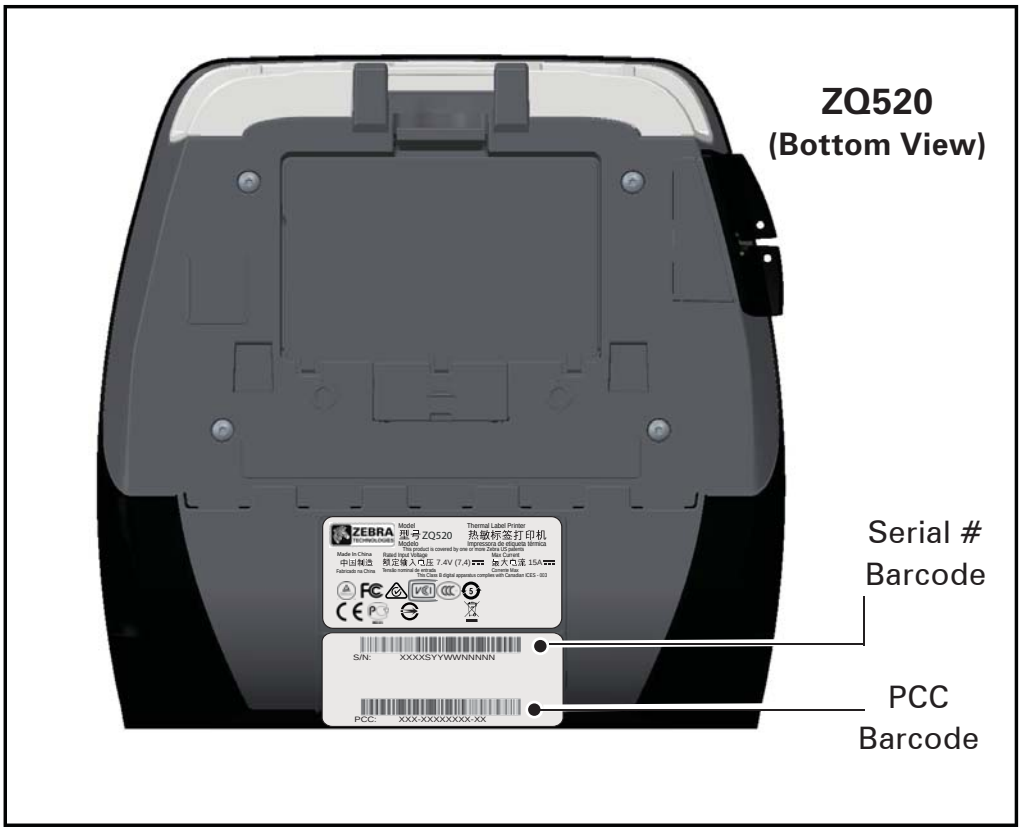

Appendix F

Battery Disposal

The EPA certified RBRC® Battery Recycling Seal on the Lithium-Ion (Li-Ion) battery supplied with your printer indicates Zebra Technologies Corporation is voluntarily participating in an industry program to collect and recycle these batteries at the end of their useful life, when taken out of service in the United States or Canada. The RBRC program provides a convenient alternative to placing used Li-Ion batteries into the trash or the municipal waste stream, which may be illegal in your area.

Important • When the battery is depleted, insulate the terminals with tape before disposal.

Please call 1-800-8-BATTERY for information on Li-Ion battery recycling and disposal bans/restrictions in your area.

Zebra Technologies Corporation's involvement in this program is part of our commitment to preserving our environment and conserving our natural resources.

Outside North America, please follow local battery recycling guidelines.

Product Disposal

The majority of this printer's components are recyclable. Do not dispose of any printer components in unsorted municipal waste. Please dispose of the battery according to your local regulations, and recycle the other printer components according to your local standards.

For more information, please see our web site at: http://www.zebra.com/environment.

Appendix G

Using Zebra.com

The following examples illustrate the search function on Zebra's website for finding specific documents and downloads.

Example 1: Find the ZQ500 Series User Guide.

Go to http://www.zebra.com/us/en/support-downloads.html

Select the appropriate printer from the Printer Support dropdown menu.

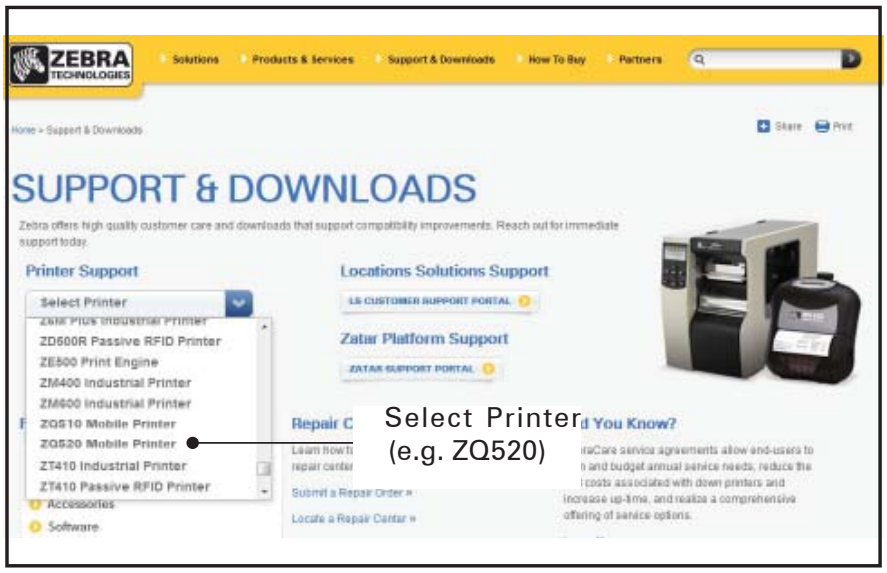

Click on the Manuals tab and select the desired language from the drop-down menu.

At the resulting screen, select "ZQ500 Series User Guide (en)" or Download to view.

Example 2: Find the ZebraNet Bridge Enterprise download page:

Go to http://www.zebra.com/us/en/products-services/software.html and click on ZebraLink under Software in the Products and Services section.

Click on “Download” in the Downloads section where shown to access the latest version of software.

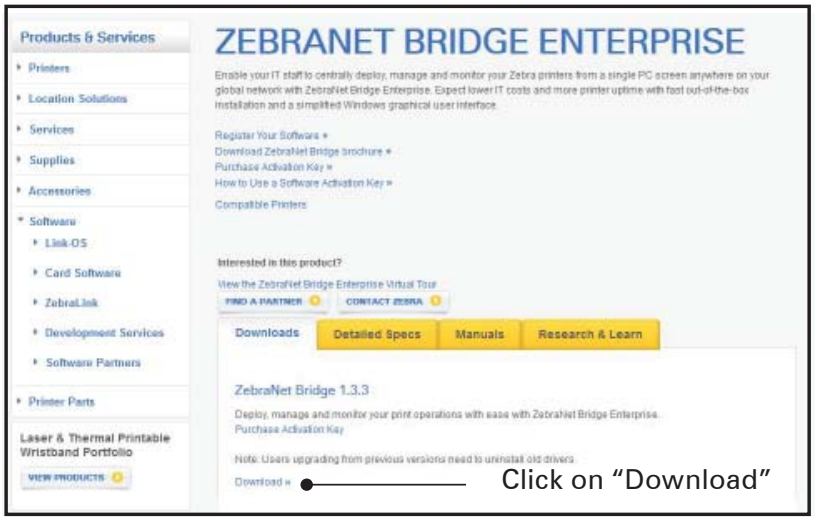

Appendix H

Product Support

When calling with a specific problem regarding your printer, please have the following information on hand:

- Model number/type (e.g. ZQ520)
- Unit serial number (refer to Appendix E)
- Product Configuration Code (PCC) (refer to Appendix E)

In the Americas contact:

Regional Headquarters	Technical Support	Customer Service Dept.
Zebra Technologies Corporation 475 Half Day Road, Suite 500 Lincolnshire, Illinois 60069 U.S.A. T: +1 847 634 6700 Toll Free: +1 866 230 9494 F: +1 847 913 8766	T: +1 877 275 9327 F: +1 847 913 2578 Hardware: ts1@zebra.com Software: ts3@zebra.com	For printers, parts, media, and ribbon, please call your distributor, or contact us. T: +1 877 275 9327 E: clientcare@zebra.com

In Europe, Africa, the Middle East, and India contact:

Regional Headquarters	Technical Support	Customer Service Dept.
Zebra Technologies Europe Limited Dukes Meadow Millboard Road Bourne End Buckinghamshire SL8 5XF, UK T: +44 (0)1628 556000 F: +44 (0)1628 556001	T: +44 (0) 1628 556039 F: +44 (0) 1628 556003 E: Tseurope@zebra.com	For printers, parts, media, and ribbon, please call your dis tributor, or contact us. T: +44 (0) 1628 556032 F: +44 (0) 1628 556001 E: cseurope@zebra.com

In the Asia Pacific region contact:

Regional Headquarters	Technical Support	Customer Service Dept.
Zebra Technologies Asia Pacific Pte. Ltd. 120 Robinson Road #06-01 Parakou Building Singapore 068913 T: +65 6858 0722 F: +65 6885 0838	T: +65 6858 0722 F: +65 6885 0838 E: (China) tschina@zebra.com All other areas: tsasiapacific@zebra.com	For printers, parts, media, and ribbon, please call your distributor, or contact us. T: +65 6858 0722 F: +65 6885 0836 E: (China) order-csr@zebra.com All other areas: csasiapacific@zebra.com

Index

Symbols

4-Bay Power Station 20

A

Accessories 3, 4, 37, 40, 59
AC Power Adapter 19
AC Power Adapter (included in kit p/n P1031365-024) 19, 20
Alerts 26
Appendix A, USB Cables 60
Appendix B, Alert Messages 61
Appendix C, Media Supplies 62
Appendix D, Maintenance Supplies 62
Appendix E, Serial Number and PCC Number Locations 63
Appendix F, Battery Disposal 64
Appendix G, Using Zebra.com 65
Appendix H, Product Support 67

B

Battery, extending life 41
Battery, health 16
Battery, installing 14
Battery pack
  Smart Battery, features 9
Battery, safety 15
Battery Safety Guidelines 19
Belt Clip 3, 37
Bluetooth 30
Bluetooth, networking 31
Bluetooth, security modes 32

C

Cable Communication 29
Charger, battery
  UCLI72-4 Quad Charger 17
    charging times 18
    front panel indicators 18
Charger Safety 15
Charger Safety Guidelines 15
Communication Port 56
Communications Diagnostics 47
Configuration Label, printing 28
Configuration Label, sample 49
Connecting the Printer 29
CPCL Font and Bar Code Specifications and Commands 54

D

Dimensions, ZQ510 57
Dimensions, ZQ520 58
Document Conventions 7, 41
Draft Mode 28
Dual Radio 34

E

Exoskeleton 3, 39, 59

G

General Cleaning Instructions 41
Getting Ready to Print 14

H

Hand Strap 3, 37, 38, 59

I

Installing the Battery 14
Introduction to the ZQ500™ Series Printers 8

L

LED's 26

M

Made for iPhone (MFi) 11
Mag Card Reader 3, 40, 59
Media, loading 22

N

Near Field Communication (NFC) 11
NFC Tag 13

O

Operator Controls 24

P

Power Save Mode 27
Power Up Sequences 25
Preventive Maintenance 3, 41
Printer Status Icons 24
Printer Status Indicators 44
Printing Method
  Direct Thermal 10
Programming language
  CPCL 8

Q

QR Code 11
Quad Charger, cycle times 18
Quad Charger, UCLI72-4 17

R

Run Time Sequences 26

S

Segmentation Mode 27
Shoulder Strap 3, 38, 59
Sleep Mode 27
Smart Battery 9
Smart Charger-2 (SC2) Single Battery Charger 16
Soft Case 3, 38, 59
Specifications, label 53
Specifications, memory and communications 52
Specifications, physical, environmental and electrical 56
Specifications, printing 52

T

Technical Support, contacting 48
Thermal Shutdown 11
Troubleshooting 44
Troubleshooting, topics 45
Troubleshooting, tests 47

V

Vehicle Cradle 20
Verify Printer is Working 28

W

WLAN, overview 34

Z

ZQ500 Series Overview 12
ZQ500 Series Technology 9
ZPL Font and Bar Code Specifications and Commands 55

Zebra Technologies Corporation
475 Half Day Road, Suite 500
Lincolnshire, IL 60069 USA
T: +1 847.634.6700 or +1 800.423.0442